Delicately Robust

CSI CONTACT CSI FOR MORE INFORMATION | CSIDESIGNS.COM | SALES@CSIDESIGNS.COM | 417.831.1411

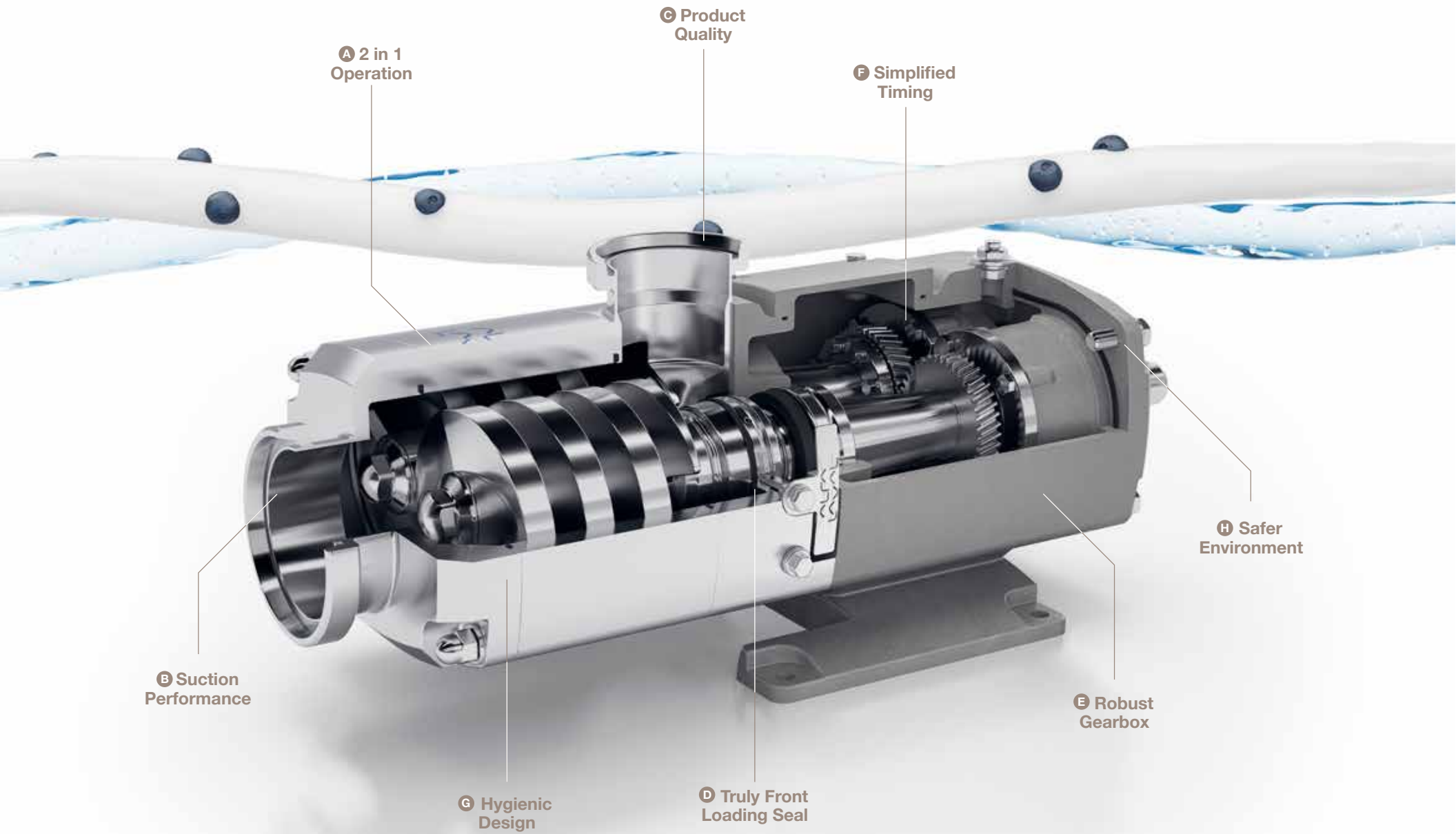
Ⓒ Product Quality
Ⓐ 2 in 1 Operation
Ⓕ Simplified Timing
Ⓗ Safer Environment
Ⓑ Suction Performance
Ⓔ Robust Gearbox
Ⓖ Hygienic Design
Ⓓ Truly Front Loading Seal

The Alfa Laval Twin Screw Pump

The Alfa Laval Twin Screw Pump is designed for process flexibility and precision engineered based on decades of proven technology. The pump is capable of handling both product transfer and Cleaning-in-Place (CIP) – and can move seamlessly between the two. Low pulsation characteristics and superior solids handling capability reduce the risk of product damage, thereby improving product quality. Superior suction performance provides installation flexibility and increases product recovery.

The pump, with its robust and reliable platform, meets the highest hygienic standards, simplifies maintenance and increases process uptime.

Process Flexibility

A 2 in 1 Operation
Ability to easily handle process media of varying viscosities as well as CIP fluids, simplifying piping and pump control, cutting costs and minimizing contamination risks.

B Suction Performance
Superior suction performance with excellent lift capability and low NPSHr provides installation flexibility and increases product recovery.

C Product Quality
Smooth and gentle in operation with low pulsation characteristic and excellent solids handling capability, reduces the potential for product damage.

Service & Reliability

D Truly Front Loading Seal
Quick, easy seal replacement with the pump in place is made possible, thanks to a cartridge seal with a truly front-loading, self-setting design. This maximizes process uptime and minimizes maintenance costs. An optional seal service kit program adds maintenance flexibility and cuts operating costs.

E Robust Gearbox
A sturdy, all stainless steel gearbox with timing gears located between bearings, provides an optimised bearing span giving balanced loading of the shaft assembly, reducing vibration and noise, increasing component life and reliability.

Oil chamber design provides for enhanced bearing and gear lubrication, minimising gearbox running temperature, increasing bearing life.

F Simplified Timing
Easy access to timing gears whilst pump is in position, simplifies process of screw retiming without the need to drain gearbox oil or remove coupling and motor.

Operational Safety

G Hygienic Design
A clean, external stainless steel finish with profiled elastomers and mechanical seals fully surrounded by product. Designed for maximum cleanability utilising FDA conforming materials, the pump is both EHEDG and 3A certified.

H Safer Environment
The combination of optimized gearbox design and excellent hydraulic performance provides for quiet pump operation reducing noise emissions to a minimum. Furthermore, running temperature is minimized, increasing workplace safety.

An optional ATEX version allows use in hazardous zones.

Alfa Laval in brief

Alfa Laval is a leading global provider of specialized products and engineered solutions.

Our equipment, systems and services are dedicated to helping customers to optimize the performance of their processes. Time and time again.

We help our customers to heat, cool, separate and transport products such as oil, water, chemicals, beverages, foodstuffs, starch and pharmaceuticals.

Our worldwide organization works closely with customers in almost 100 countries to help them stay ahead.

How to contact Alfa Laval

Up-to-date Alfa Laval contact details for all countries are always available on our website at www.alfalaval.com

100001065-1-EN 1901

www.alfalaval.com/twinscrew

CSI CONTACT CSI FOR MORE INFORMATION | CSIDESIGNS.COM | SALES@CSIDESIGNS.COM | 417.831.1411