Not manufactured anymore
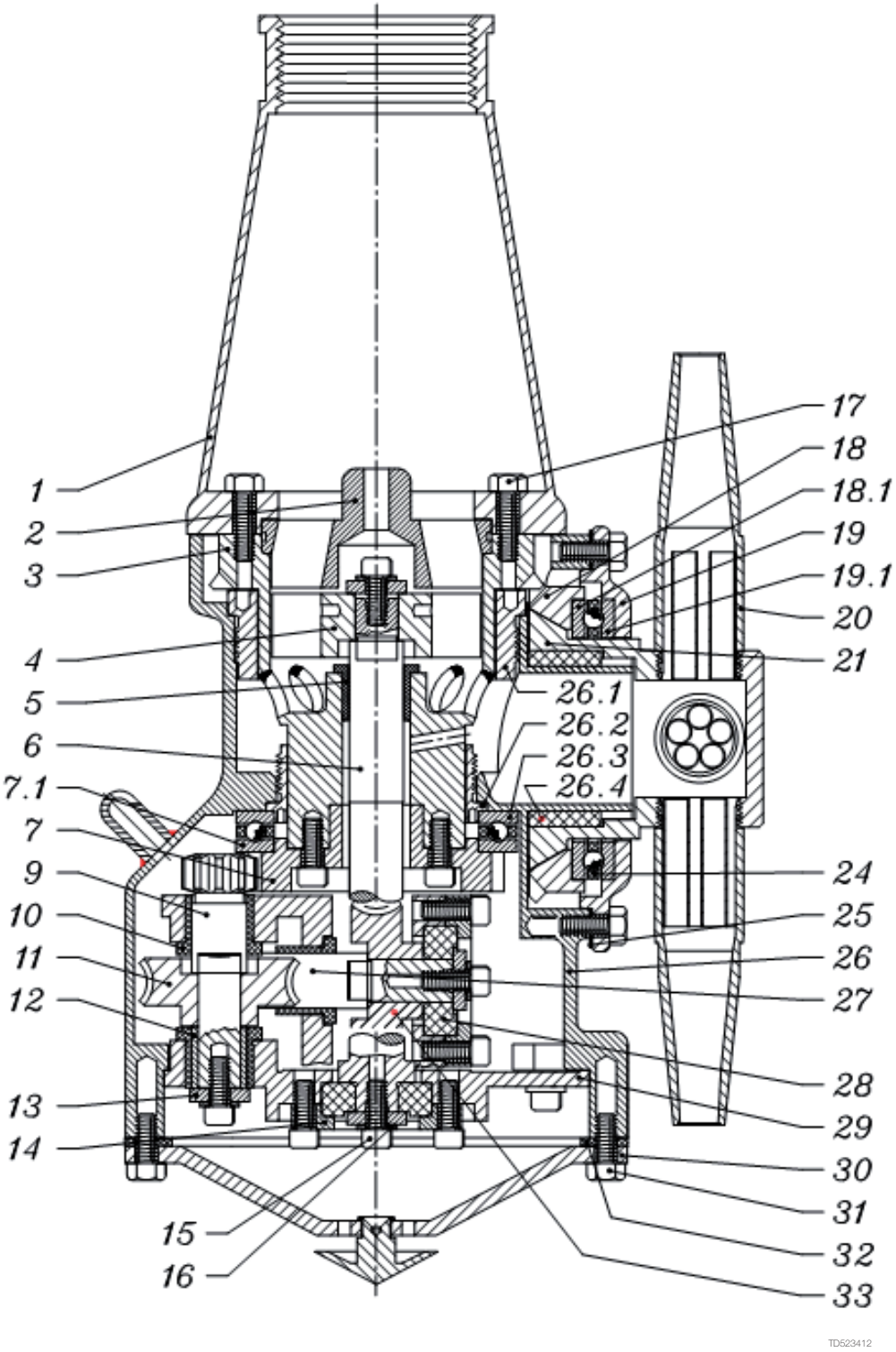
Cross sectional drawing, Toftejorg TZ-74 self cleaning