Alfa Laval ThinkTop V50 and V70

Automation

Introduction

ThinkTop V50 and V70 take valve control to a new level and use all features available on the Alfa Laval diaphragm, butterfly, single-seat and mixproof valves. While helping to increase production performance and secure traceability, ThinkTop V50 and V70 provide real-time information on valve operating status 24/7.

Both ThinkTop V50 and V70 are interchangeable with prior ThinkTop versions, and the appropriate variant is selected based on the number of solenoid valves. With only one sensor target and one adapter, ThinkTop V50 and V70 fit onto all actuators equipped with mushrooms.

ThinkTop V50 and V70 come fitted with features such as Auto Setup, Live Setup and Flex Setup that streamline the setup process, making it quick and easy. Auto Setup and Live Setup recognise the valve based on its DNA profile and can complete the valve setup without any manual interaction.

The burst seat clean function is available on ThinkTop V70. This function controls the optimum open position of the valve, making it possible to achieve up to 90% CIP liquid savings for each seat lift.

Application

ThinkTop V50 and V70 are designed for use in the dairy, food, beverage, and biopharma industries.

Benefits

- Automatic setup
- Automatic valve recognition
- Automatic selection of tolerance band
- Fast Auto, Live and Flex Setup
- 360-degree LED indication
- Burst seat clean
- Exchangeable (threaded) air-fittings
- Interchangeable with ThinkTop classics

Working principles

The control unit offers a single sensor solution for diaphragm, butterfly, single-seat and mixproof valves and it can be fitted with up to three solenoid valves. ThinkTop converts the electrical PLC output signals into mechanical energy to energise, or de-energise, the air-operated valve, using the physical sensor target mounted on the valve stem.

Installation with Auto Setup or Live Setup is intuitive and fast. To initiate Auto Setup, simply press the “SELECT” button and then the “ENTER” button to begin the setup sequence. The process is completed in accordance with the number of solenoid valves fitted to the control unit. Alternatively, the ThinkTop can be set up, without dismantling the control head, using the built-in Live Setup feature for remote-configuration

Dimensional drawings

ThinkTop V 50

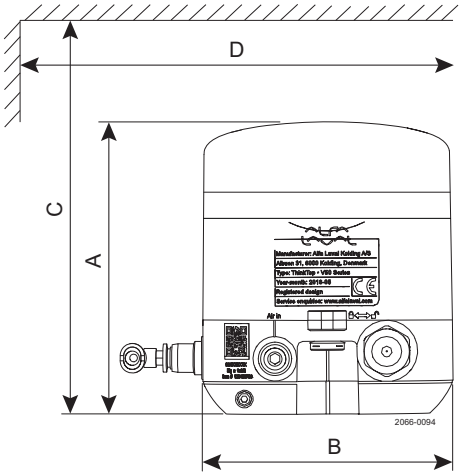

	mm	Inch
A	123	4.84
B	105	4.13
C	200	7.87
D	150	5.91

ThinkTop V 70

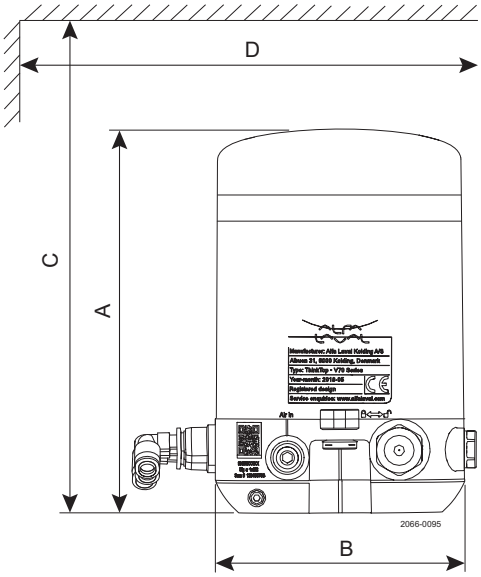

	mm	Inch
A	164	6.45
B	105	4.13
C	250	9.84
D	170	6.69

Technical data

Material

Plastic parts	Nylon PA 12
Steel parts	1.4301 / 304
Air fittings	Nickel plated / Nylon PA6
Gaskets	Nitril / NBR

Environment

Working temperature	-10°C to +60°C
Protection class (IP)	IP66, IP67 and IP69K
Protection class (NEMA)	4, 4X and 6P

Control board

Communication	See interfaces section
Sensor accuracy	± 0,1 mm
Stroke length	0.1 - 104 mm
Mean Time To Failure (MTTF)	224 years
Approved	UL/CSA

Solenoid valve

Supply voltage	24 VDC ± 10%
Nominal power	0,3 W
Air supply	300-900 kPa (3-9 bar)
Type of solenoids	3/2-ways or 5/2-way
Number of solenoids	0-3
Manual hold override	Yes
Air pressure	6-8 bar
Air quality	Class 3,3,3 acc. DIN ISO 8573-1
Mean Time To Failure (MTTF)	224 years
Recommendation	Operate once a month to prevent dry-out

Air fitting

Throttle function air inlet/outlet	0-100%
Threaded air fitting G1/8	6 mm (Rim blue) or 1/4" (Rim Grey)
Elbow push-in fittings	6 mm (Rim blue) or 1/4" (Rim Grey)

Cable connection

Main cable gland entry Digital	M16 (ø4 - ø10 mm)
Main cable gland entry AS-I	M16 (ø2 - ø7 mm) (0,08" - 0,28")
Seat lift sensor cable gland entry	M12 (ø3,5 - ø7 mm) (0,14" - 0,28")
Max wire diameter	0.75 mm2 (AWG20)

Vibration

	18 Hz-1kHz @ 7,54g RMS
Shock	100g

Drop test

Constant humidity	+40°C, 21 days, 93% R.H.
Cyclic humidity (working)	-25°C/+55°C, 12 cycles

Accessories

Seat lift sensor kit

Air fitting for air throttle function

Certifications

Operational data

LED indication

ThinkTop features a 360-degree light guide. When the sensor target is within the respective setup position band, the corresponding colour lights up.

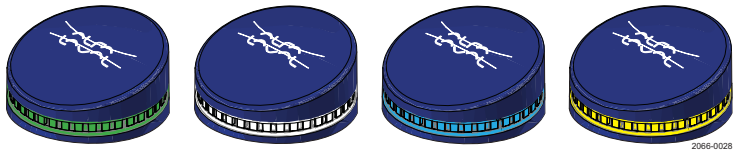

Valve position

	Actuator	All De-energised	Main valve open Energised	Upper seat lift Energised	Lower seat push Energised	Between
ThinkTop V Mode	Not setup Factory setting	Green flashing	White flashing	Blue flashing	Yellow flashing	off
	Operation	Green	White	Blue	Yellow	off
	Not OK	Green / red flashing	White / red flashing	Blue / red flashing	Yellow / red flashing	Red lashing

Auto setup

Auto Setup is a rule-based function. If one of these rules are not present, Flex Setup must be used.

By default, ThinkTop V50 and V70 uses the de-energised/energised paradigm for valve positions feedback.

3.9.3 Overview of connectors and ports

a Solenoid valve connector
b Indication lamp
c Main terminals

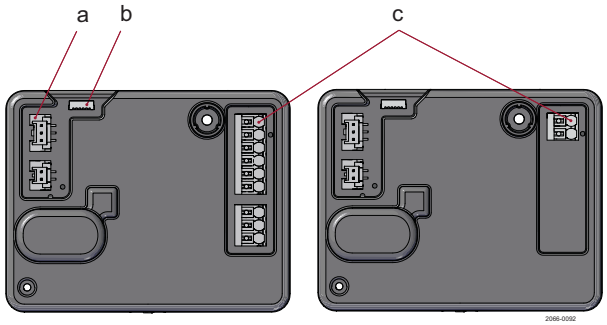

a Diagnostic Port
b Seat lift sensor terminal

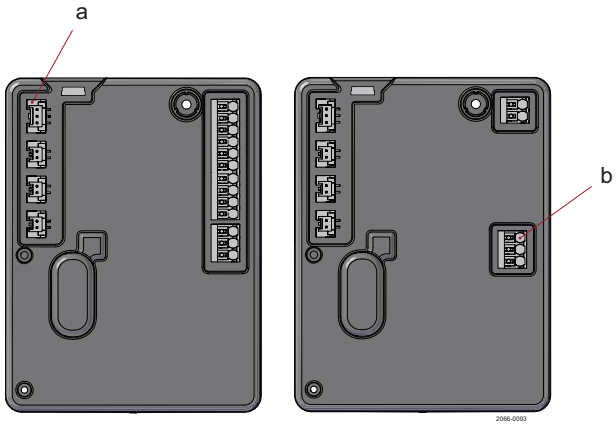

Burst clean mode

Burst seat clean mode is available for ThinkTop V70 and can be enabled when a ThinkTop V70 with 2 or 3 solenoid valves is setup successfully using Auto Setup

The burst seat clean mode is enabled or disabled on the ThinkTop V70 control board. Press "SELECT" (4 times) until LED no 4 flashes, and then press 'ENTER" to enable or disable. This option is also available as an IO-Link parameter

The burst seat clean option is from factory disabled by default. However, if it is enabled and there is a manual reset to factory default, the burst seat clean option is disabled.

Bust clean mode output diagram

a	Input (from PLC)
b	Position
c	Solenoid valve output
d	Output (both visual and electrical)
e	Position reached

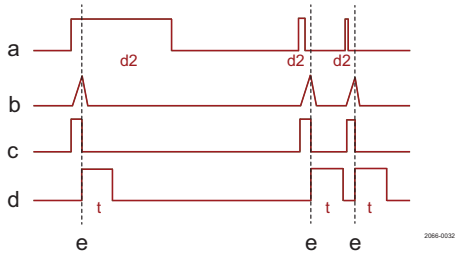

When the PLC input signal for either upper or lower seat push (Usl, Lsp) goes high, the respective solenoid valve is Energised. As soon as the sensor target reaches the predefined energised valve position, the solenoid valve is automatically de-energised by the ThinkTop V70.

A two-second electrical and visual feedback (t) is provided as a handshake for successful completion of a burst seat pulse. The PLC input duration must be at least 500 ms (d).

If ThinkTop V70 is set up using Auto Setup without the upper seat lift sensor, the function uses the stored setup stroke time for “Lower seat push” plus some extra time for when the solenoid valve is deactivated.

Water consumption graph

ThinkTop V70 CIP liquid consumption during Burst seat clean on different Mixproof valves:

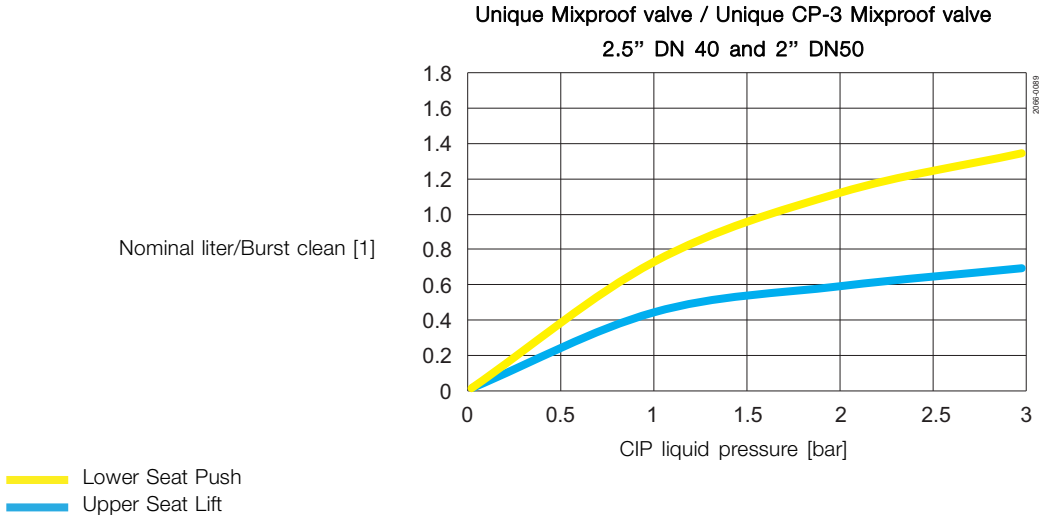

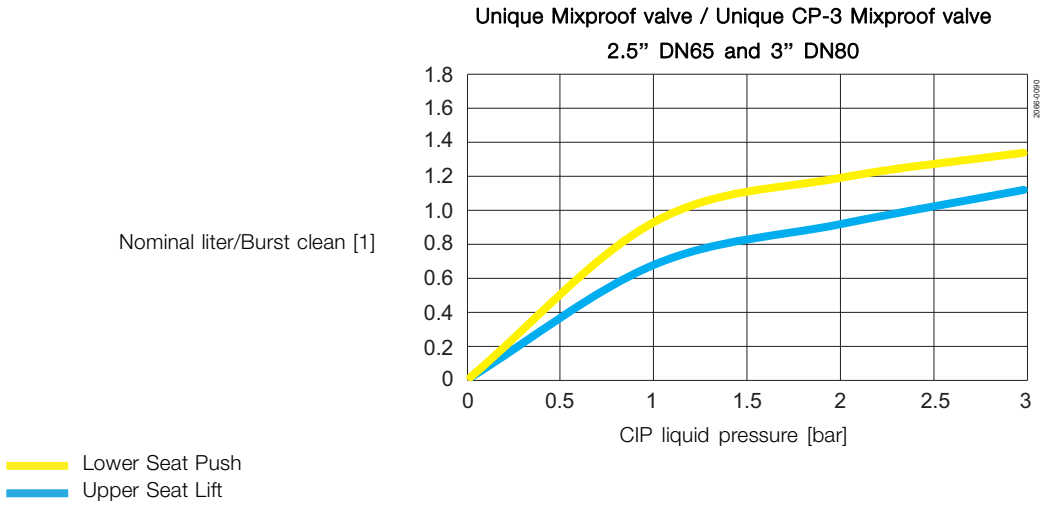

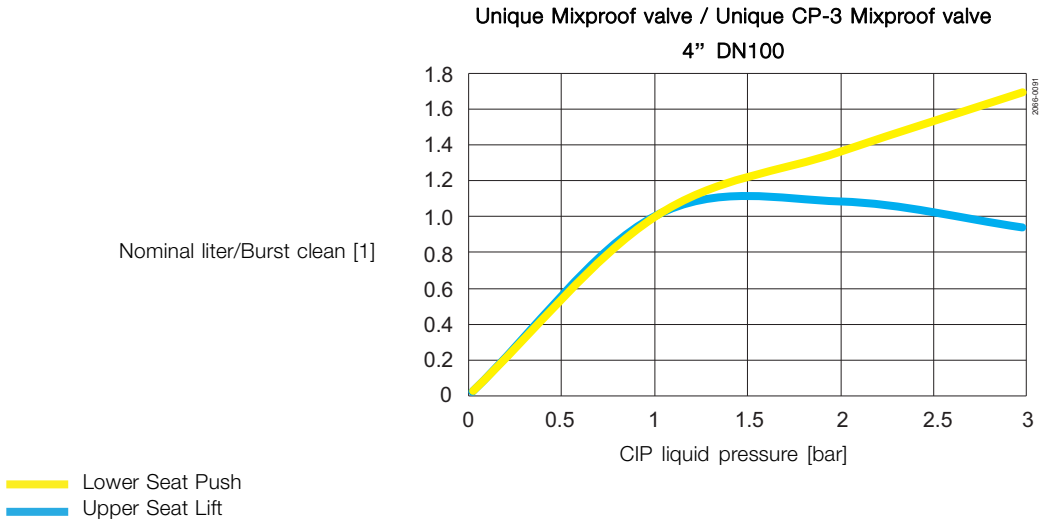

Default bitmapping

The default apply to both Digital and AS-Interface

ThinkTop V50 variants truth signal table: default factory setting

	DE-EN (I0) close	MAIN (I2) open	Status OK
DE-EN (No active SV)	1	0	1
MAIN (SV1 active)	0 ↓	1 ↑	1

ThinkTop V70 truth signal table: default factory setting

	DE-EN (I0) all closed	MAIN (I2) open	USL (I3) open	LSP (I3) open	Status OK (Fail safe signal)
DE-EN (No active SV) Both seats closed. Lower seat in closed position. Upper seat in closed position.	1	0	0	0	1
MAIN (SV1 active) Lower seat in open valve position. Upper seat not closed.	0 ↓	1 ↑	0	0	1
USL (SV2active) Upper seat not closed. Lower seat in closed position.	0 ↓	0	1 ↑	0	1
LSP (SV3 active) Lower seat in seat push position. Upper seat in closed position.	0 ↓	0	0	1 ↑	1

U.S.A. compliance option

Applies to both Digital Interface and AS-Interface, and ThinkTop V70 variants only. The U.S.A. compliance option refers to a bit mapping interface only used in USA on Mixproof valves, fitted with 3 solenoid valves. This U.S.A. bitmapping can be enabled after or before auto setup.

U.S. regulations require independent closed position feedback signals for upper seat lift and lower seat push in a Mixproof valve application

The U.S.A. bitmapping are enabled or disabled on the ThinkTop V70 control board. Press "SELECT" (5 times) until LED no 8 flashes, and then press 'ENTER" to enable or disable. This option is also available as an IO-Link parameter.

The U.S.A. compliance option is from factory disabled by default. However, if it is enabled and there is a manual reset to factory default, the U.S.A. compliance option remains enabled.

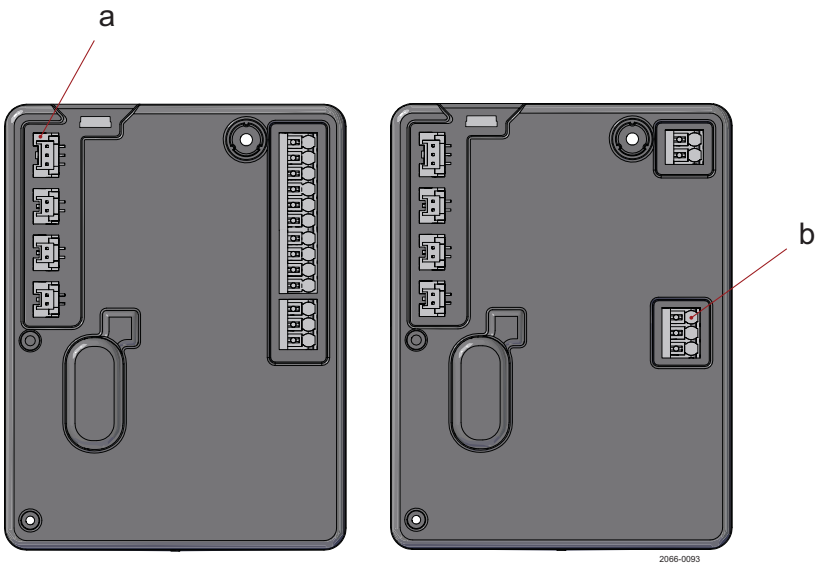

U.S.A. bitmapping

The information in the table is based on the following setup:

- ThinkTop V70 with 3 solenoid valves
- IFT series seat lift sensor of the type NO or NC
- Mixproof valve with both seats installed (balanced or unbalanced upper plug)
- Any combination of above valve type and sensor type

	DE-EN (I0) Both closed	MAIN (I2) open	USL (I3) closed	LSP (I3) closed	Status OK (Fail safe signal)
DE-EN (No active SV) Both seats closed. Lower seat in closed position. Upper seat in closed position.	1	0	1	1	1
MAIN (SV1 active) Lower seat in open valve position. Upper seat not closed.	0 ↓	1 ↑	0 ↓	0 ↓	1
USL (SV2active) Upper seat not closed. Lower seat in closed position.	0 ↓	0	0 ↓	1	1
LSP (SV3 active) Lower seat in seat push position. Upper seat in closed position.	0 ↓	0	1	0 ↓	1

Valve compatibility chart

	Common applications (Auto/Live Setup)	Special application examples (Flex Setup)	Incompatible valves
ThinkTop V50	Single seat valves Small Single Seat valve Butterfly valves Diaphragm valves Ball valves Shutter valves Double seat valves Double seat valves	ThinkTop classic retrofit mode or alternative setup with no restrictions Feedback structure such as the open/closed valve feedback SSV NO DN150 maintainable, set it up as a rotary valve	Valves without raising stem and mushrooms Regulating valves Safety valves Sample valves SMP-EC 700 series
ThinkTop V70	In addition to the ThinkTop V50 valves Double seat valves Double seat valves Long stroke single seat valves Air/Air Valves	Application with no solenoid valve, feedback Indication only One control unit to control multiple valves	Other valve brands

Digital interface

ThinkTop Digital 24V DC

Device name	ThinkTop V50 DIO ThinkTop V70 DIO
Voltage supply	24 VDC ± 10%; according to EN 61131-2
Protection	Reverse polarity (24 VDC ± 10%); EN 61131-2
	Voltage interruption and brown-out; EN61131
	Short circuit; EN 61131
Current consumption	Nominal 30mA (Idle)
Outputs to PLC	Max 100mA (solenoid valve and seat lift sensor active)
PLC input card	Max rated 24V/100A
UL supply	Class 2 according to cULus
Voltage drop	Typical 3V at 50 mA
Terminal type	Spring force push-in technology
	Supports nominal wire cross-section of 1 mm2. (Min. 0.3) [17AWG] (Min. 22AWG)
	Supports wire and ferrules for wire cross-section of 0.75 mm2 [20AWG] with pin length 12 mm

Electrical connections

ThinkTop V50

Terminals	Control board	Colour code wires
1	24V	BN (brown)
2	GND	BU (blue)
3	out: Status	WH (white)
4	out: DE-EN	BK (black)
5	out: EN. Main valve	GY (grey)
6	in: SV1. Main valve	PK (pink)

ThinkTop V70

Terminals	Control board	Colour code wires
1	24V	BN (brown)
2	GND	BU (blue)
3	out: Status	WH (white)
4	out: DE-EN	BK (black)
5	out: EN. Main valve	GY (grey)
6	out: USL. Upper seat lift	PK (pink)
7	out: LSP. Lower seat push	VT (violet)
8	in SV1. Main valve	OG (orange)
9	in SV2. Upper seat lift	GY/PK (grey/pink)
10	in SV3. Lower seat push	WH/BU (white/blue)
	Seat lift sensor	
E1	L+	BN (brown)
E2	GND	BU (blue)
E3	Signal	BK and WH

ThinkTop V50

M12 option (8-pin A-coded plug)
Pin numbers and terminal numbers are aligned

M12 Chassis plug connector	Control board Terminal numbers Functions	M12 pin numbers with wire colors per solenoid valve setup	
		0 x 3/2-way	1 x 3/2-way
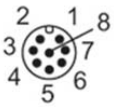	1: 24V	1: BN (brown)	1: BN (brown)
	2: GND	3: BU (blue)	3: BU (blue)
	3: out: Status	2: WH (white)	2: WH (white)
	4: out: DE-EN	4: BK (black)	4: BK (black)
	5: out: EN. Main valve	5: GY (grey)	5: GY (grey)
	6: in SV1. Main valve	-	6: PK (pink)

ThinkTop V70

M12 option (8-pin A-coded plug)
Pin numbers and terminal numbers are aligned

M12 Chassis plug connector	Control board Terminal numbers Functions	M12 pin assignment and wire colour per solenoid valve setup				
		0 x 3/2-way	1 x 3/2-way	2 x 3/2-way	3 x 3/2-way	1 x 5/2-way
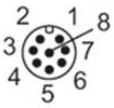	1: 24V	1: BN (brown)	1: BN (brown)	1: BN (brown)	1: BN (brown)	1: BN (brown)
	2: GND	3: BU (blue)	3: BU (blue)	3: BU (blue)	3: BU (blue)	3: BU (blue)
	3: out: Status	2: WH (white)	2: WH (white)	2: WH (white)	2: WH (white)	2: WH (white)
	4: out: DE-EN	4: BK (black)	4: BK (black)	4: BK (black)	4: BK (black)	4: BK (black)
	5: out: EN. Main valve	5: GY (grey)	5: GY (grey)	5: GY (grey)	5: GY (grey)	5: GY (grey)
	6: out: USL Upper seat lift	-	6: PK (pink)	6: PK (pink)	-	6: PK (pink)
	7: out: LSP. Lower seat push	-	7: VT (violet)	-	-	7: VT (violet)
	8: in SV1. Main valve	-	8: OG (orange)	8: OG (orange)	8: OG (orange)	8: OG (orange)
	9: in SV2. Upper seat lift	-	-	7: VT (violet)	6: PK (pink)	-
	10: in SV3. Lower seat push	-	-	-	7: VT (violet)	-

Cable gland - Option - Cable plug connector 10 wires Length 300 mm	Control board Terminal numbers Functions	Cable plug and wire assignment per solenoid valve setup				
		0 x 3/2-way	1 x 3/2-way	2 x 3/2-way	3 x 3/2-way	1 x 5/2-way
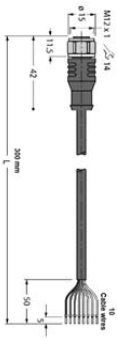	1: 24V	BN (brown)	BN (brown)	BN (brown)	BN (brown)	BN (brown)
	2: GND	BU (blue)	BU (blue)	BU (blue)	BU (blue)	BU (blue)
	3: out: Status	WH (white)	WH (white)	WH (white)	WH (white)	WH (white)
	4: out: DE-EN	BK (black)	BK (black)	BK (black)	BK (black)	BK (black)
	5: out: EN. Main valve	-	GY (grey)	GY (grey)	GY (grey)	GY (grey)
	6: out: USL Upper seat lift	-	-	PK (pink)	PK (pink)	-
	7: out: LSP. Lower seat push	-	-	-	VT (violet)	-
	8: in SV1. Main valve	-	OG (orange)	OG (orange)	OG (orange)	OG (orange)
	9: in SV2. Upper seat lift	-	-	GY/PK (grey/pink)	GY/PK (grey/pink)	-
	10: in SV3. Lower seat push	-	-	-	WH/BU (white/blue)	-

AS-Interface

ThinkTop AS-Interface

Device name	ThinkTop V50 ASI2 & ThinkTop V50 ASI3 ThinkTop V70 ASI2 & ThinkTop V70 ASI3
Supply voltage	AS-Interface 29.5 - 31.6 VDC
Protection	Reverse polarity (24 VDC ± 10%); EN 61131-2 Voltage interruption and brown-out; EN 61131 Short circuit; EN 61131
Current consumption	Nominal: 30 mA (idle) Max 100 mA (solenoid valve and seat lift sensor active)
Terminal type	Spring force push-in technology Supports nominal wire cross-section of 1 mm2. (Min. 0.3) [17AWG] (Min. 22AWG) Supports wire and ferrules for wire cross-section of 0.75 mm2 [20AWG] with pin length 12 mm
AS-I specification v2.11	Supports standard addressing and are compatible with M0-M4 AS-I master profiles, allows up to 31 nodes on an AS-I network Slave profile = 7FFF
AS-I specification v3.0	Supports extended A/B addressing and is compatible with M4 AS-I master profile, allows up to 62 nodes on an AS-I network Slave profile = 7A77
AS-I addressing	Default slave address (Node) is = 0 Address (Node) changes with a standard handheld AS-I addressing device or via AS-I Master Gateway

AS-Interface bit table

For the AS-Interface versions, the following bit assignment will be used

PLC system / Gateway Output table	ThinkTop V50	ThinkTop V70
Auto setup	O0	O0
SV1. Main valve	O1	O1
SV2. Upper seat lift	nc	O2
SV3. Lower seat push	nc	O3

PLC system / Gateway Input table	ThinkTop V50	ThinkTop V70
DE-EN	I0	I0
EN. Main valve	I1	I1
Upper seat lift	nc	I2
Lower seat push	nc	I3

Electrical connections

ThinkTop V50

Terminal	Control board	Colour code wires
1	AS-i +	BN (brown)
2	AS-i -	BU (blue)

ThinkTop V70

Terminal	Control board	Colour code wires
1	AS-i +	BN (brown)
2	AS-i -	BU (blue)
	Seat lift sensor	
E1	L+	BN (brown)
E2	GND	BU (blue)
E3	Signal	BK (black) and WH (white)

100001472en 0519

ThinkTop V50

M12 option (4-pin A-coded plug)
Pin numbers and terminal numbers are aligned

M12 Chassis plug connector	Control board Terminal numbers Functions	M12 pin assignment and wire colour per solenoid valve setup	
		0 x 3/2-way	1 x 3/2-way
	1: AS-i +	1: BN (brown)	1: BN (brown)
	2: nc	_	_
	3: AS-i -	3: BU (blue)	3: BU (blue)
	4: nc	_	_

ThinkTop V70

M12 option (4-pin A-coded plug)
Pin numbers and terminal numbers are aligned

M12 Chassis plug connector	Control board Terminal numbers Functions	M12 pin assignment and wire colour per solenoid valve setup				
		0 x 3/2-way	1 x 3/2-way	2 x 3/2-way	2 x 3/2-way	1 x 5/2-way
	1: AS-i +	1: BN (brown)	1: BN (brown)	1: BN (brown)	1: BN (brown)	1: BN (brown)
	2: nc	_	_	_	_	_
	3: AS-i -	3: BU (blue)	3: BU (blue)	3: BU (blue)	3: BU (blue)	3: BU (blue)
	4: nc	_	_	_	_	_

Alfa Laval reserves the right to change specifications without prior notification.

How to contact Alfa Laval
Contact details for all countries
are continually updated on our website.
Please visit www.alfalaval.com to
access the information direct.

Alfa Laval is a trademark registered and owned by Alfa Laval Corporate AB.

CSI CONTACT CSI FOR MORE INFORMATION | CSIDESIGNS.COM | SALES@CSIDESIGNS.COM | 417.831.1411