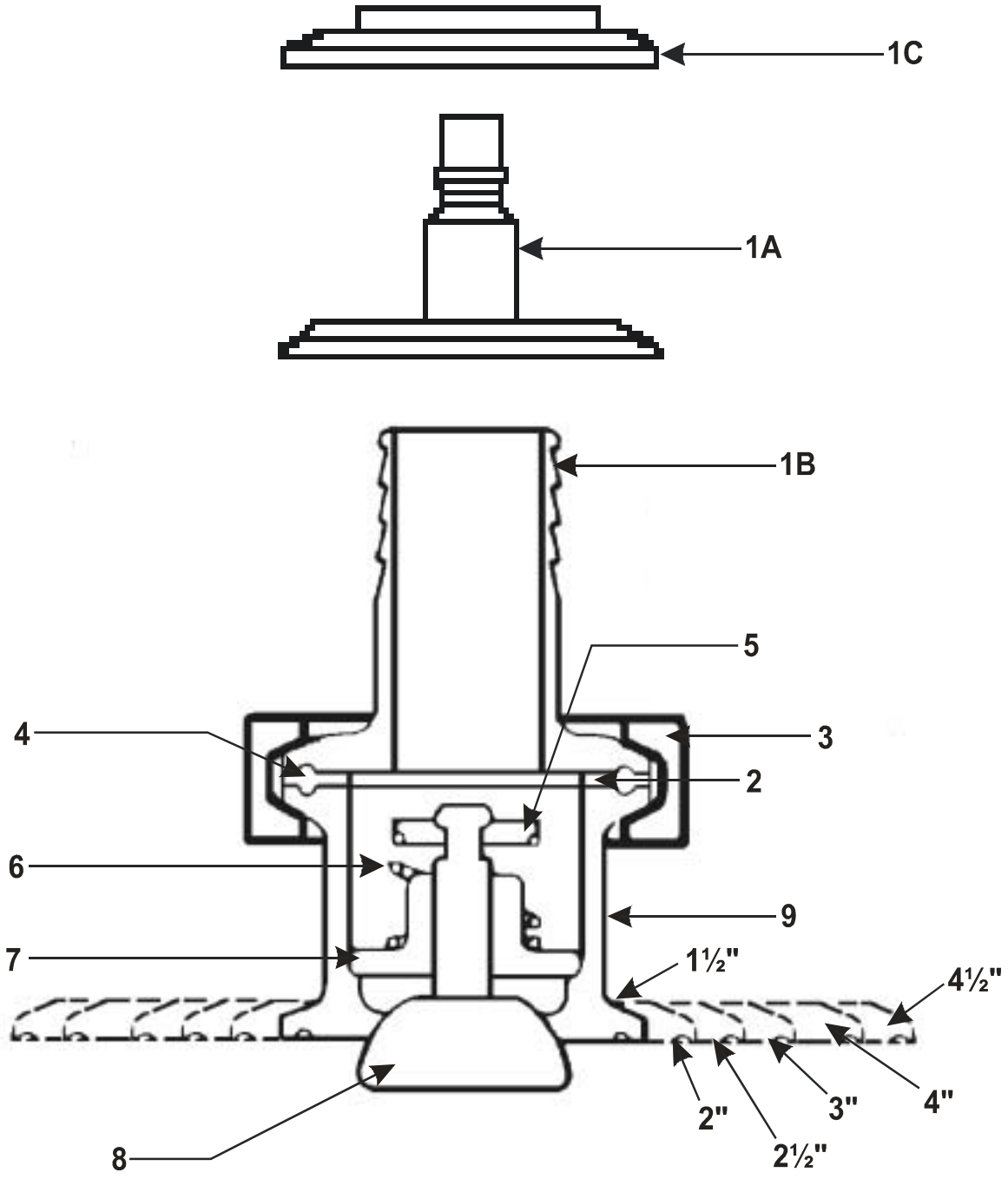
1C
1A
1B
5
4
3
2
6
9
7
1½"
4½"
2"
3"
4"
2½"
8