bürkert
FLUID CONTROL SYSTEMS

Type 8681

Control Head

Operating Instructions

CSI

MAN 1000138479 EN Version: F Status: RL (released | freigegeben) printed: 10.05.2016

MAN 1000138479 EN Version: F Status: RL (released | freigegeben) printed: 10.05.2016

We reserve the right to make technical changes without notice.
Technische Änderungen vorbehalten.
Sous resérve de modification techniques.

© Bürkert Werke GmbH, 2010 - 2014

Operating Instructions 1412/05_EN_00806150 / Original DE

Control Head Type 8681

Contents

1. OPERATING INSTRUCTIONS 8

2. AUTHORIZED USE 9

2.1. Export restrictions 9

3. BASIC SAFETY INSTRUCTIONS 10

4. GENERAL INFORMATION 12

4.1. Contact address 12

4.2. Warranty 12

4.3. Information on the Internet 12

5. SYSTEM DESCRIPTION 13

5.1. Intended application area 13

5.2. General description 13

5.3. Functions / options / designs 14

5.3.1. Structure of the control head 14

5.3.2. Fluid diagrams 15

5.3.3. Number of solenoid valves 16

5.3.4. Pneumatic interfaces 16

5.3.5. Manual control 17

5.3.6. Position measuring system 17

5.3.7. Other features 17

6. TECHNICAL DATA 18

6.1. Operating conditions 18

6.2. Conformity with the following standards 18

6.3. Rating plate specifications 19

6.4. Mechanical data 21

6.5. Pneumatic data 23

6.6. Position measuring system data 24

MAN 1000138479 EN Version: F Status: RL (released | freigegeben) printed: 10.05.2016

CSI 417.831.1411 csidesigns.com

6.7. Factory settings in the firmware 25
6.7.1. Feedback fields (position measuring system) 25
6.7.2. Service / maintenance notification (maintenance request) 26
6.7.3. Manual control function (magnetic) 26
6.8. Resetting the device (Device Reset) 27

7. ASSEMBLY 28
7.1. Safety instructions 28
7.2. Assembly of the control head 28
7.2.1. Hub flange 28
7.2.2. Assembly sequence on the example of a double-seated valve 29
7.2.3. Realignment of the control head 30
7.2.4. Assembly of the pneumatic and electrical connections 30
7.2.5. Recommended auxiliary materials 30

8. OPENING AND CLOSING THE HOUSING 31
8.1. Safety instructions 31
8.2. Opening and closing the housing 31
8.2.1. Opening the housing 31
8.2.2. Closing the housing 32

9. PNEUMATIC INSTALLATION 33
9.1. Safety instructions 33
9.2. Pneumatic connection of the control head 33
9.3. Flow restriction function of the solenoid valves 34

10. 24 V DC - DESIGN 36
10.1. Electrical connection options 36
10.2. Electrical data 36
10.3. Design aid 38
10.4. Safety instructions 39
10.5. Electrical installation / start-up 39
10.5.1. Cable gland with screw terminals 39
10.5.2. Multi-pole connection 42

MAN 1000138479 EN Version: F Status: RL (released | freigegeben) printed: 10.05.2016

11. AS INTERFACE - DESIGN 43
11.1. Definition 43
11.2. Electrical connection options for AS interface 44
11.3. Number of connectable control heads and maximum length of the bus line 44
11.4. Electrical data 45
11.5. Design aid 47
11.6. Safety instructions 48
11.7. Electrical installation of the AS interface 49
11.8. Programming data 51

12. DEVICENET - DESIGN 52
12.1. Definition 52
12.2. Electrical connection option 52
12.3. DeviceNet specification 52
12.3.1. Total line length and maximum line length according to DeviceNet specification 53
12.3.2. Drop line length 53
12.4. Electrical data 54
12.5. Safety position if the bus fails 54
12.6. Design aid 55
12.7. Safety instructions 56
12.8. Electrical installation - DeviceNet 56
12.9. Network topology of a DeviceNet system 58
12.10. Configuring the DeviceNet address / baud rate 58
12.10.1. Settings of the DeviceNet address 59
12.10.2. Setting the baud rate 60
12.11. Configuration of the process data 60
12.11.1. Static input assemblies 60
12.11.2. Static output assembly 61
12.12. Configuration of the device 61
12.12.1. Configuration of the safety position of solenoid valves during a bus error 61
12.12.2. Configuration example 62

MAN 1000138479 EN Version: F Status: RL (released | freigegeben) printed: 10.05.2016

CSI 417.831.1411 csidesigns.com

12.13. Display of the status LEDs in the event of a bus error 63
12.13.1. Status of the device status LED "Modules" 63
12.13.2. State of bus status LED "Network" 64

13. 120 V AC - DESIGN 65
13.1. Electrical connection options 65
13.2. Electrical data 65
13.3. Design aid 66
13.4. Safety instructions 67
13.5. Electrical installation / start-up 68

14. CONNECTION OF AN EXTERNAL INITIATOR 71

15. SPECIAL DESIGNS 73
15.1. Control head for double-acting actuators 73
15.1.1. Anomalies 73
15.1.2. Fluid diagram 73
15.1.3. Activation of a double-acting actuator 73
15.2. Control head (AS-i) with 2 external initiators 74
15.2.1. Anomalies 74
15.2.2. Electrical installation and programming data 74

16. POSITION MEASURING SYSTEM 75
16.1. Setting the position measuring system (Teach-In) 76
16.2. Teach button functions 77
16.2.1. Teach functions and Teach reset 77
16.2.2. Autotune functions 78
16.2.3. Autotune sequence 78

17. LED COLOR ASSIGNMENTS 81
17.1. Setting the color combinations 82
17.2. Blinking pattern & fault signaling 82
17.3. Signal priorities 83

MAN 1000138479 EN Version: F Status: RL (released | freigegeben) printed: 10.05.2016

18. SERVICE MODE / MANUAL CONTROL 84
18.1. Magnetic manual control 84
18.2. Mechanical manual control 85
19. MAINTENANCE, TROUBLESHOOTING 86
19.1. Safety instructions 86
19.2. Safety positions 87
19.3. Maintenance / service 88
19.4. Cleaning 88
19.5. Malfunctions 88
20. REPLACEMENT OF COMPONENTS AND MODULES 90
20.1. Safety instructions 90
20.2. Changing the electronics module 91
20.3. Changing the valves 92
20.4. Changing the position measuring system 93
21. SHUTDOWN 96
21.1. Safety instructions 96
21.2. Dismantling the control head Type 8681 96
22. PACKAGING AND TRANSPORT 97
23. STORAGE 97
24. DISPOSAL 97

MAN 1000138479 EN Version: F Status: RL (released | freigegeben) printed: 10.05.2016

CSI 417.831.1411 csidesigns.com

1. OPERATING INSTRUCTIONS

The operating instructions describe the entire life cycle of the device. Keep these instructions in a location which is easily accessible to every user, and make these instructions available to every new owner of the device.

WARNING!

The operating instructions contain important safety information!

Failure to observe these instructions may result in hazardous situations.

- The operating instructions must be read and understood.

Symbols:

DANGER!

Warns of an immediate danger!

- Failure to observe the warning will result in a fatal or serious injury.

WARNING!

Warns of a potentially dangerous situation!

- Failure to observe the warning may result in serious injuries or death.

CAUTION!

Warns of a possible danger!

- Failure to observe this warning may result in a moderate or minor injury.

NOTE!

Warns of damage to property!

- Failure to observe the warning may result in damage to the device or the equipment.

Indicates important additional information, tips and recommendations.

Refers to information in these operating instructions or in other documentation.

→ Designates a procedure which you must carry out.

MAN 1000138479 EN Version: F Status: RL (released | freigegeben) printed: 10.05.2016

2. AUTHORIZED USE

Incorrect use of the control head Type 8681 may be dangerous to people, nearby equipment and the environment.

- The control head has been designed for use as actuation of pneumatically operated process valves and / or for recording the switching states of these.
- Use according to the authorized data, operating conditions and conditions of use specified in the contract documents and operating instructions. These are described in Chapter *6. Technical data*.
- In view of the large number of application options, check and, if necessary, test prior to installation whether the control head is suitable for the specific application case:
  Should you have any questions, please contact your Bürkert Service Center.
- Use the device only in conjunction with third-party devices and components recommended and authorized by Bürkert.
- Any unauthorized reconstructions and changes to the control head are prohibited for safety reasons.
- Correct transportation, correct storage and installation as well as careful operation and maintenance are essential for reliable and problem-free operation.
- For connecting the control head, use line installations that do not cause any mechanical stresses.
- Use the device only as intended.

2.1. Export restrictions

If exporting the system/device, observe any existing restrictions.

MAN 1000138479 EN Version: F Status: RL (released | freigegeben) printed: 10.05.2016

CSI 417.831.1411 csidesigns.com

3. BASIC SAFETY INSTRUCTIONS

These safety instructions do not make allowance for any

- contingencies and events which may arise during the assembly, operation, and maintenance of the devices.
- local safety regulations – the operator is responsible for observing these regulations, also in relation to the installation personnel.

DANGER!

Danger – high pressure!

- Before loosening lines and valves, turn off the pressure and vent the lines.

Danger of explosion in explosive atmosphere (only in the event of a fault as zone 2)!

- Opening the hood or the housing in an explosive atmosphere is only allowed in a not energized state!
- Secure the housing with a lead seal to prevent it from being opened without a tool!
- Activating the DIP switches on the PCB, using the service interface and the Teach buttons, is **not** permitted in an explosive atmosphere!
- Layers of dust on the housing may not exceed 5 mm! Lint, conductive and non-conductive dust particles are allowed. The inside of the housing must not be dirty!
- When wiping the control head, use a damp or anti-static cloth in the explosion-risk area to prevent electrostatic charges!
- Use only cables and cable glands which have been approved for the respective application area and which have been screwed into place according to the respective installation instructions!
- Close all unnecessary openings with locking screws/sealing plugs approved for explosions area!

WARNING!

Risk of electric shock!

- Before reaching into the system (except for the Teach-In procedure in a non-explosive atmosphere) switch off the power supply and secure it to prevent restarting!
- Observe applicable accident prevention and safety regulations for electrical equipment!

General hazardous situations.

To prevent injuries:

- Ensure that the system cannot be activated unintentionally.
- Installation and maintenance work, as well as operator control actions may be carried out by authorized and qualified technicians only and with the appropriate tools.
- Do not make any unauthorized internal or external changes to the device!
- After an interruption in the electrical or pneumatic supply, ensure that the process is restarted in a defined or controlled manner.
- The device may be installed and operated only when in perfect condition and in consideration of the operating instructions.
- The general rules of technology apply to application planning and operation of the device.

MAN 1000138479 EN Version: F Status: RL (released | freigegeben) printed: 10.05.2016

NOTE!

Electrostatic sensitive components/modules!

- The device contains electronic components which react sensitively to electrostatic discharge (ESD). Contact with electrostatically charged persons or objects may be hazardous to these components. In the worst case scenario, they will be destroyed immediately or will fail after start-up.
- Observe the requirements in accordance with EN 61340-5-1 to minimize or avoid the possibility of damage caused by sudden electrostatic discharge!
- Also ensure that you do not touch electronic components when the supply voltage is on!

NOTE!

Risk of damage to property!

- Do not connect any mechanically rigid connection parts, in particular those with long lever arms, as such connections could generate torques that might damage the control head.
- Do not supply the medium connections of the system with liquids or aggressive or flammable media!
- Do not subject the housing to mechanical loads (e.g. by placing objects on it or standing on it).
- Do not make any external changes to the housings of the device. Do not paint housing parts or screws.
- Only use compatible cleaning agents for cleaning the securely closed control head and always rinse thoroughly with clean water.

Control head Type 8681 was developed with due consideration given to accepted safety rules and is state-of-the-art. Nevertheless, dangerous situations may occur.

MAN 1000138479 EN Version: F Status: RL (released | freigegeben) printed: 10.05.2016

CSI 417.831.1411 csidesigns.com

4. GENERAL INFORMATION

4.1. Contact address

Bürkert Fluid Control Systems
Sales Center
Christian-Bürkert-Straße 13-17
D-74653 Ingelfingen, Germany

Tel.: +49 7940 10 91 111
Fax: +49 7940 10 91 448

Email: info@de.buerkert.com
Website: www.burkert.com

4.2. Warranty

The warranty is only valid if the control head is used as intended in accordance with the specified application conditions.

4.3. Information on the Internet

The operating instructions and data sheets for control head type 8681 can be found on the Internet at:

www.burkert.com

> Documentation > Operating instructions/approvals > Type search

MAN 1000138479 EN Version: F Status: RL (released | freigegeben) printed: 10.05.2016

5. SYSTEM DESCRIPTION

5.1. Intended application area

The control head Type 8681 has been designed for use as an actuator for pneumatically operated process valves and / or for recording the switching states of these.

5.2. General description

The control head Type 8681 is used for actuating pneumatically operated process valves.

For process valve actuation, the control head can be equipped with up to three solenoid valves.

For the recording and feedback of the process valve switching positions to a higher-level control, the control head has been equipped with a contact-free position measuring system which operates with 3 discrete, adjustable feedback signals (Teach-In function).

The control head and the process valve are interconnected by an adapter. This produces an integrated, compact and decentralized system of feedback, actuation and valve function. The following advantages over centralized solutions working with valve clusters are achieved:

- low installation expenditure
- easy start-up
- higher application-specific flexibility
- shorter switching times and less air consumption due to shorter distances between the pilot valve and the process valve.

Various pneumatic and electrical connection variants are available.

MAN 1000138479 EN Version: F Status: RL (released | freigegeben) printed: 10.05.2016

CSI 417.831.1411 csidesigns.com

5.3. Functions / options / designs

5.3.1. Structure of the control head

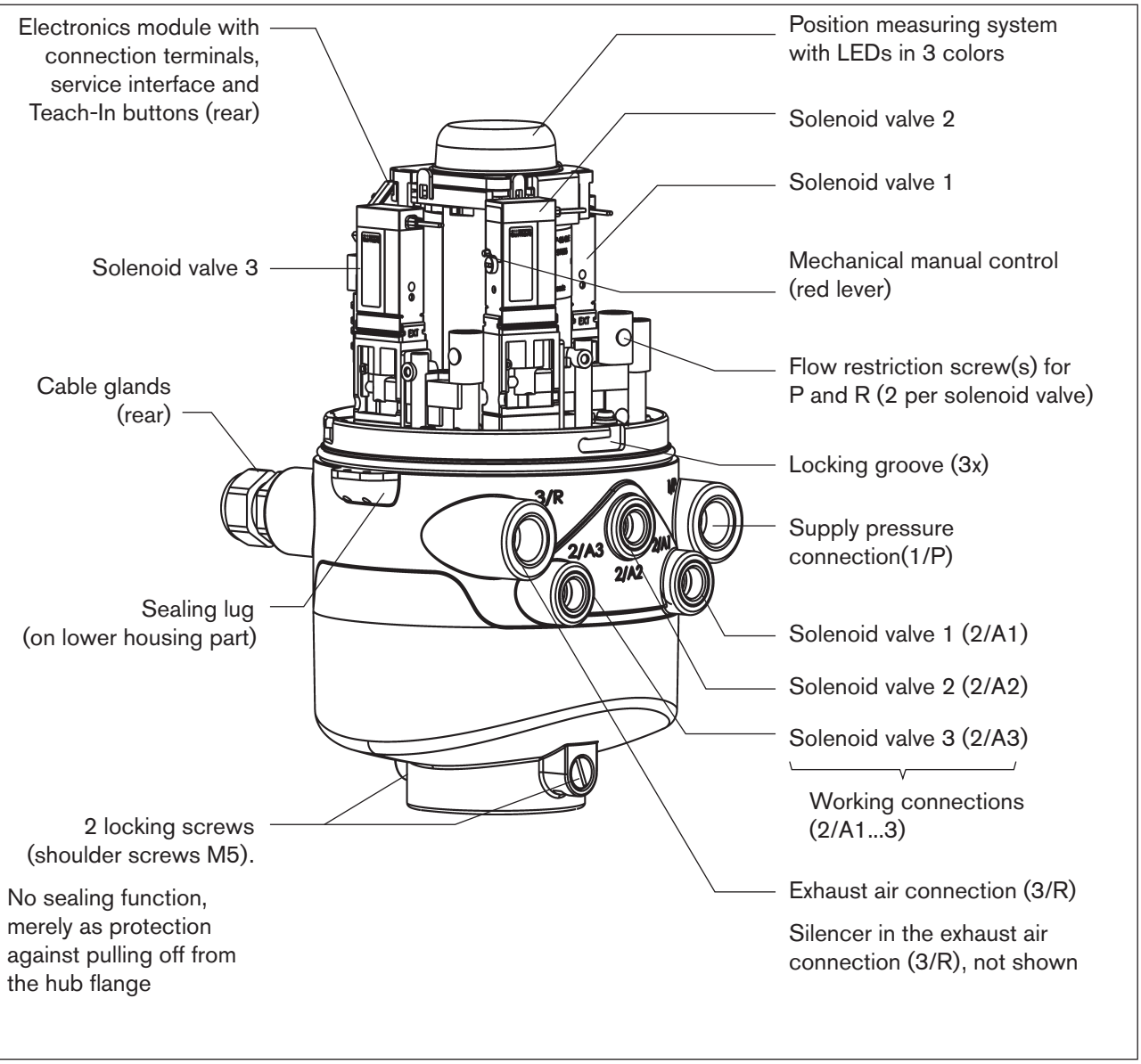

Fig. 1: Structure of control head Type 8681

MAN 1000138479 EN Version: F Status: RL (released | freigegeben) printed: 10.05.2016

5.3.2. Fluid diagrams

Control head Type 8681 - Fluid diagram (with restriction capability for each solenoid valve):

Model with 3 solenoid valves Type 6524,
e.g. for double-seated valve

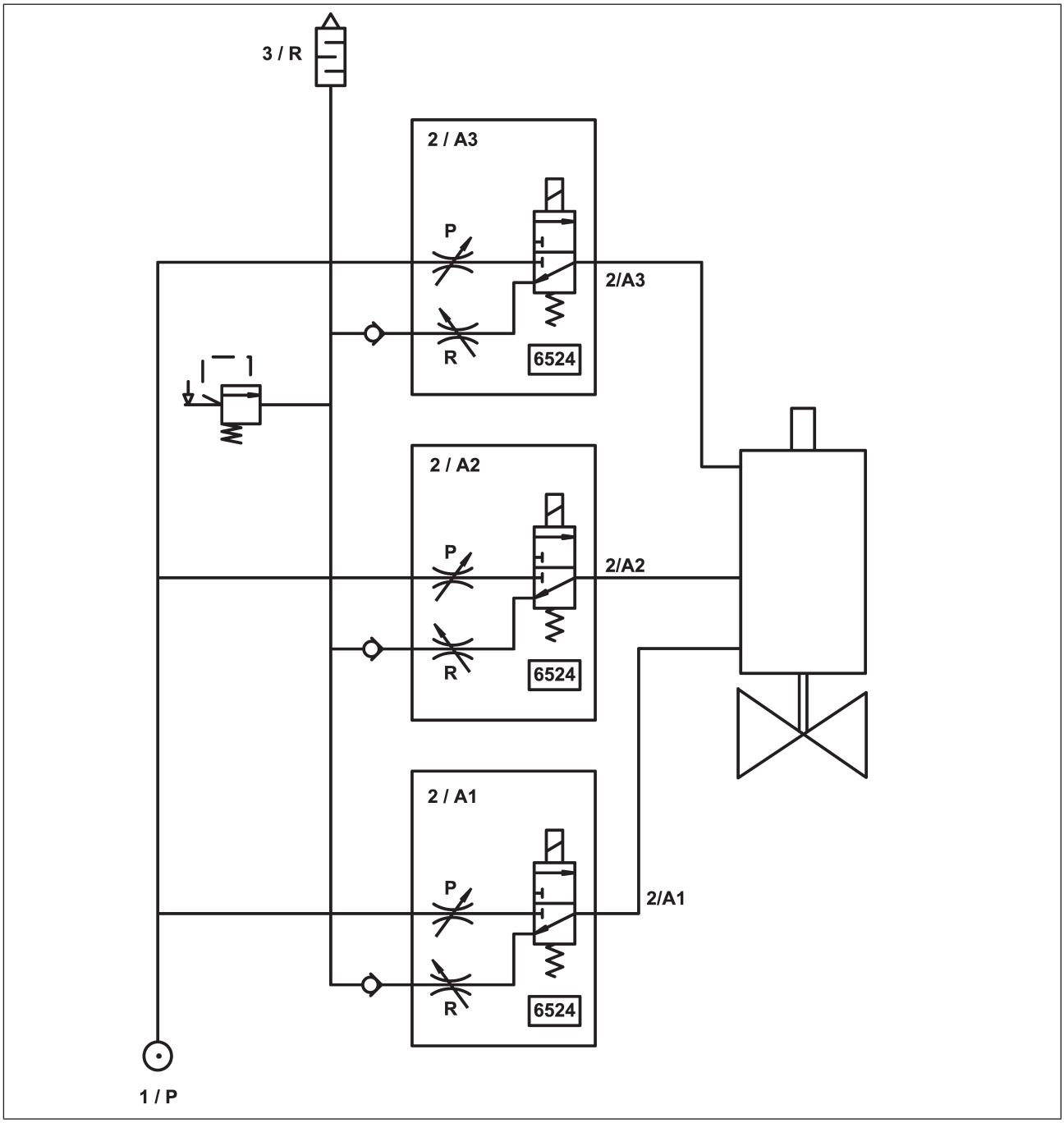

Fig. 2: Fluid diagram (model: 3 solenoid valves)

MAN 1000138479 EN Version: F Status: RL (released | freigegeben) printed: 10.05.2016

CSI 417.831.1411 csidesigns.com

Control head Type 8681 - design for double-acting actuators - fluid diagram (with restriction option of each solenoid valve):

Model with 2 solenoid valves Type 6524 (solenoid valve 1: NC, solenoid valve 2: NO, for double-acting actuators (safety position) - see also Chapter "15. Special designs" on page 73.

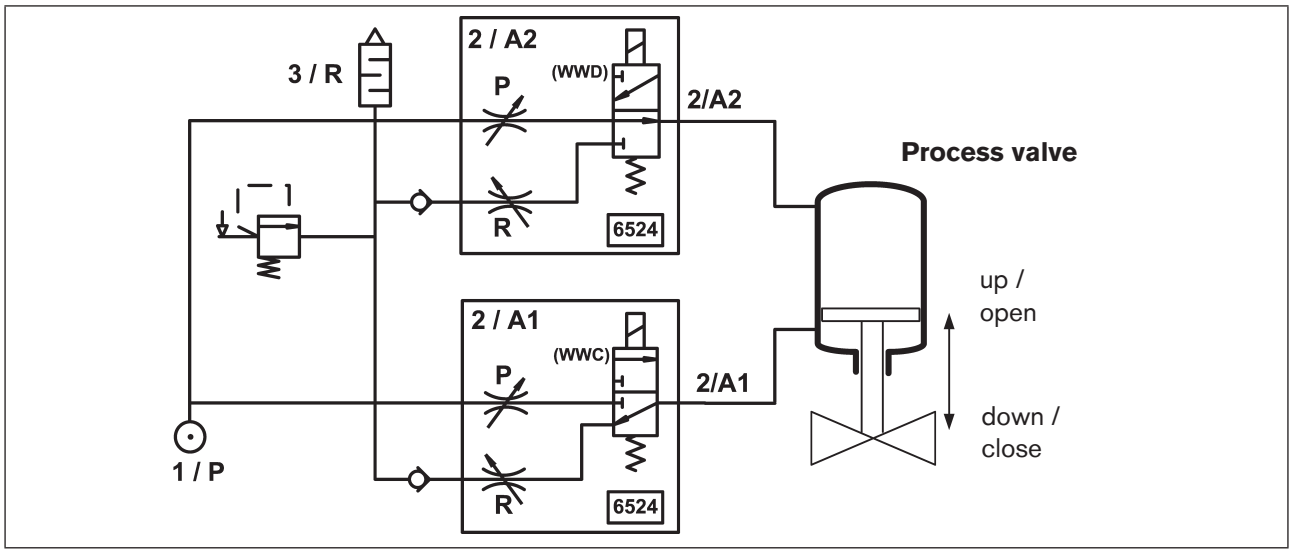

Fig. 3: Fluid diagram (design for double-acting actuators: 2 solenoid valves, NC + NO**)*

5.3.3. Number of solenoid valves

The control head for process valves has been designed for single-acting and double-acting actuators as well as for double-seated and multi-position valves.

Type of use	Number of solenoid valves
Repeater	0
Control head for single-acting actuators	1 (NC*)
Control head for double-acting actuators (both drive chambers not energized and deaerated)	2 (2 x NC*)
Control head for double-seated valves with integrated aeration of both valve seats	3 (3 x NC*)
Control head for double-acting actuators (with safety position)	2 (1 x NC* + 1 x NO**)

Details on design for double-acting actuators (1 solenoid valve NC*, 1 solenoid valve NO**) - see Chapter "15. Special designs" on page 73.

5.3.4. Pneumatic interfaces

- Intake & exhaust air connections: G 1/4
  Working connections: G 1/8
- Integrated non-return valves in the solenoid valves' exhaust air duct

* *NC = 3/2-way valve; closed in rest position, output A relieved*
** *NO = 3/2-way valve; opened in rest position, output A pressurized*

MAN 1000138479 EN Version: F Status: RL (released | freigegeben) printed: 10.05.2016

- Actuation of Connection 2/A1 (Solenoid Valve 1; normally the main stroke of the process valve) using the magnetic manual control that is externally accessible.
  (both solenoid valves are actuated simultaneously for the design for double-acting actuators)
- Special silencers with a high flow-rate capacity to connection 3/R have already been mounted.
- The interior of the housing is protected against excessive overpressure, for example due to leakages, by a pressure-relief valve with output into the joint exhaust air connection 3/R.

5.3.5. Manual control

The control head provides the following as standard:

- a magnetic manual control that is easily accessible from the outside on the basis of encoded magnetic fields for Solenoid Valve 1 (Connection 2/A1), as well as
- a mechanical manual control accessible when the hood is open on each equipped solenoid valve

The magnetic manual control has the following advantages:

- the control head does not need to be opened
- simple actuation tool for opening/closing solenoid valve 1 (main stroke) -
  helpful for service/maintenance work on the process valve
  (both solenoid valves are actuated simultaneously for the design for double-acting actuators)
- LED display for the "activated manual control" status = service mode
  (see Chapters “17. LED Color Assignments” and “18. Service Mode / Manual Control”)

! For a detailed description of the manual control, see Chapter “18. Service Mode / Manual Control”.

5.3.6. Position measuring system

The switching positions of the process valves are reported to the actuator by feedback signals from the solderless position measuring system. Connection to the control head is done by means of a simple adaptation to the process valve's piston. Details are described in Chapters “6.6. Position measuring system data” on page 24 and “16. Position Measuring System” on page 75.

5.3.7. Other features

- Central optical position indicator for showing the process valve switching positions:
  Positions and status information can be indicated by 3 signal colors.
  The assignment of the signal colors and the "blinking pattern", which indicates the type of fault, are described in Chapter “17. LED Color Assignments”.
- Simple adaptation of the control head (for the position measuring system) to the process valve piston rod
- Simple adjustment of the position measuring system by 3 Teach-In buttons on the electronics module
- The capability of restricting the pilot valve (solenoid valve) for the individual setting of the expansion and retraction rates of the process valve and the individual setting of the flow-rate of the working connections
- More energy efficient solenoid valve actuation by lowering the holding current during long-term operation

MAN 1000138479 EN Version: F Status: RL (released | freigegeben) printed: 10.05.2016

CSI 417.831.1411 csidesigns.com

6. TECHNICAL DATA

6.1. Operating conditions

DANGER!

Danger of explosion in explosive atmosphere (only in the event of a fault as zone 2)!

- Do not expose the device to any mechanical or thermal loads that will exceed the limits described in the operating instructions.

WARNING!

Risk of injury from overheating of the control head.

Heating above the permitted temperature range can endanger people, the device and the environment.

- Do not expose the device to any mechanical or thermal loads that will exceed the limits described in the operating instructions.

Ambient temperature:	Standard version:	-10 ... +55 °C
	Explosive atmosphere (Zone 2):	+5 ... +55 °C

Degree of protection:

Standard version:

IP65 / IP67 according to EN 60529
(only if cables, plugs and sockets have been connected correctly, the hood has been sealed correctly and the adaptation to the process valve was done correctly)

IP69K according to IEC 40050-9
(Housing seal with connected exhaust air line instead of silencer and ideally closed cable glands confirmed through IP69K Standard testing)

Version for use in explosive atmosphere (Zone 2):

IP64 according to EN 60529 and requirements EN 60079-0: 2009
(only if cables, plugs and sockets have been connected correctly, the hood has been sealed correctly and the adaptation to the process valve was done correctly)

6.2. Conformity with the following standards

The control head conforms to the EC Directives according to the EC Declaration of Conformity.

The applied standards, which are used to demonstrate compliance with the EC Directives, are listed in the EC Declaration of Conformity and/or the EC type test certificate. These are available from Bürkert.

The specifications on the respective rating plate apply to the respective control head. The symbols on the rating plate indicate the applicable directives or approvals:

MAN 1000138479 EN Version: F Status: RL (released | freigegeben) printed: 10.05.2016

Pressure Equipment Directive 94/9/EC				
	Ignition protection type:	Dust ATEX category 3D	Ex tD A22 T135°C or Ex tc IIIC T135°C	
		Gas ATEX category 3G	Ex nA IIC T4 or Ex nAc IIC T4	
FM - Factory Mutual				
	NI/I/2/ABCD/T5; +5°C < Ta < 55°C IP64 (cables and cable glands are not part of the FM approval of the device and are therefore not fitted at the factory.)			
c UL us - Underwriters Laboratories (Canada and USA)				
	UL 61010-1 AND CSA C22.2 NO. 61010-1 Restrictions:	Application area: 0 to +55°C, Indoor use, power supply with class-2 power supply unit		

6.3. Rating plate specifications

Symbols:	
CE	Device complies with European standards according to EC Declaration of Conformity
Ex	Approval according to the Pressure Equipment Directive
FM APPROVED	FM approval for explosion-proof equipment
c UL us LISTED	UL approval for USA and Canada

CSI 417.831.1411 csidesigns.com

Lines:	Rating plate
1	Device designation
2	Operating voltage or type of communication (24 V DC, AS-i, DVN, 120 V DC) / type of actuator (MV0 = no MV, MV1 = single-action, MV2 = 2 MV, not double-acting, MV3 = 3 MV, MVD = 2 MV, double-acting) / pressure range
3	Permitted pressure range
4	Permitted temperature range
5	Serial number
6	ID number / manufacturer's specifications
Lines:	**Warning sign**
1	any specifications, if applicable, according to Pressure Equipment Directive (gas) / ambient temperature
2	any specifications, if applicable, according to Pressure Equipment Directive (dust) / degree of protection specification
3	**WARNING! WARNING!** In explosion-risk areas ...
4	... the surface must only be wiped down with a damp cloth.
5	In hazardous areas, the surface may only be cleaned with a damp cloth.

MAN 1000138479 EN Version: F Status: RL (released | freigegeben) printed: 10.05.2016

6.4. Mechanical data

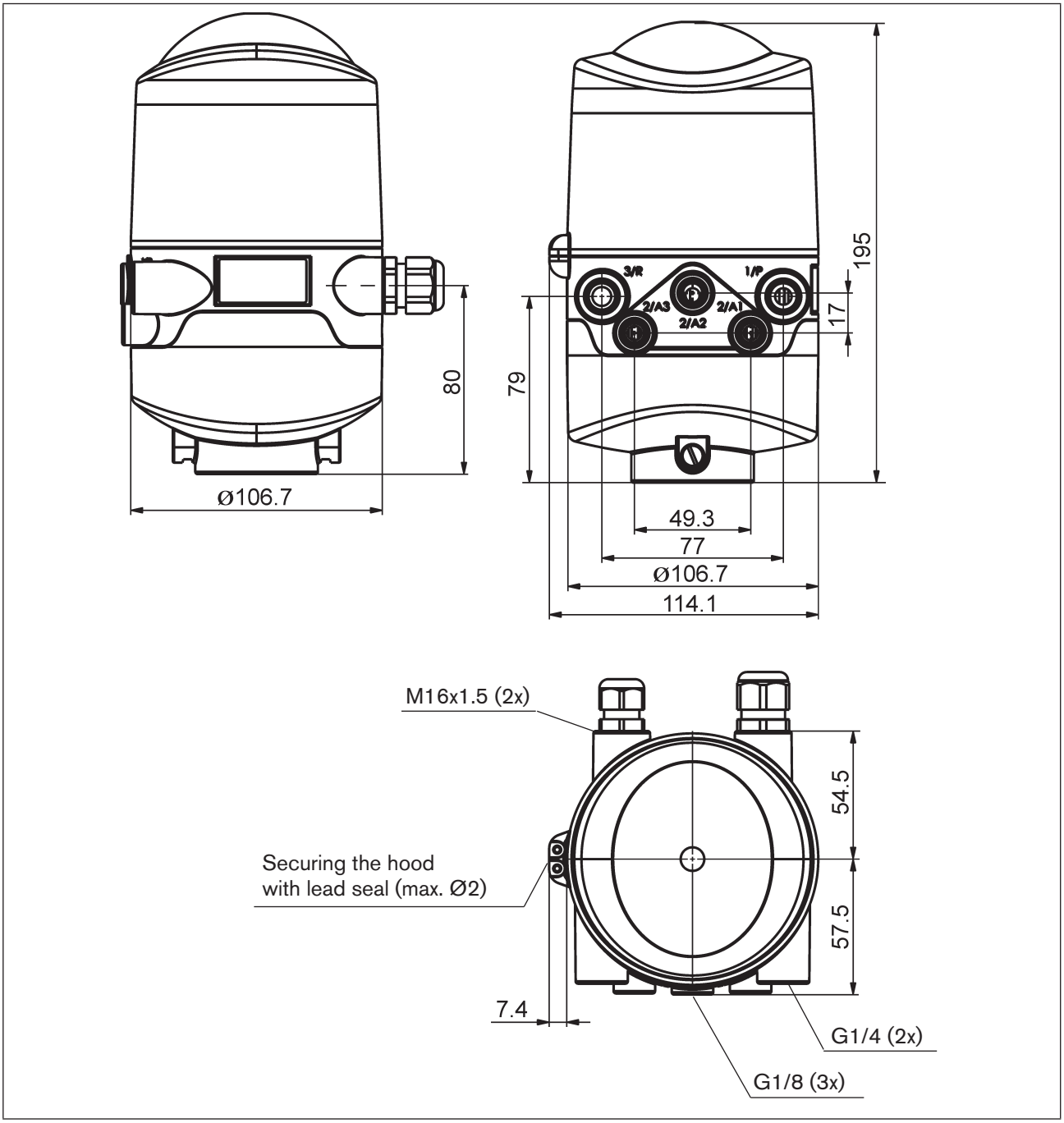

Fig. 4: Dimensional drawing (for models with 1 to 3 solenoid valves)

MAN 1000138479 EN Version: F Status: RL (released | freigegeben) printed: 10.05.2016

CSI 417.831.1411 csidesigns.com

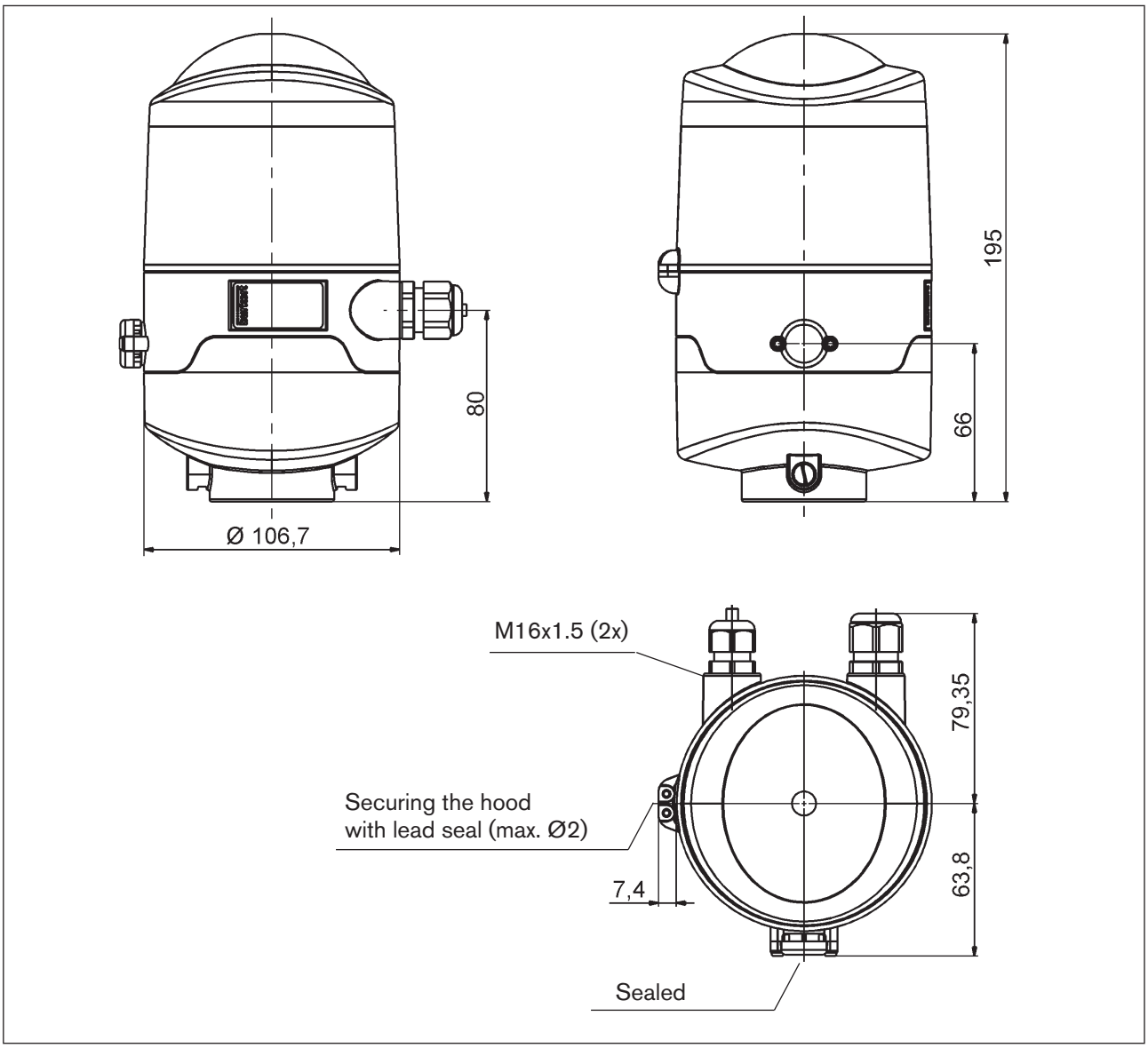

Fig. 5: Dimensional drawing (for models without solenoid valves)

Weight:	Approx. 0.8 kg	
Housing material:	exterior:	PA, PC, PPO, VA
	inside:	ABS, PA, PMMA
Sealing material:	exterior:	CR, EPDM
	inside:	EPDM, FKM, NBR

MAN 1000138479 EN Version: F Status: RL (released | freigegeben) printed: 10.05.2016

CSI 417.831.1411 csidesigns.com

6.5. Pneumatic data

Control medium:		Air, neutral gases Quality classes in accordance with ISO 8573-1 (5 µm filter recommended)
Dust content	Quality class 7:	max. particle size 40 µm, max. particle density 10 mg/m³
Water content	Quality class 3:	max. pressure dew point -20 °C or min. 10 °C below the lowest operating temperature
Oil content	Quality class X:	max. 25 mg/m³
Temperature range of compressed air:		-10 ... +50 °C
Pressure range:		2.5 ... 8 bar
Air rate solenoid valve:		110 l_N/min (for ventilation and deaeration, aeration) (110 l_N/min - supplied state 200 l_N/min - maximum typical flow rate) (Q_{Nn} value according to definition when pressure drops from 7 to 6 bar absolute at +20 °C)
Connections:		Intake and exhaust air connection G1/4 Working connections G1/8

The intake and exhaust air can be set separately for each solenoid valve using flow restriction screws, in order to be able to affect the expansion and retraction rates of the process valve (see figure below).

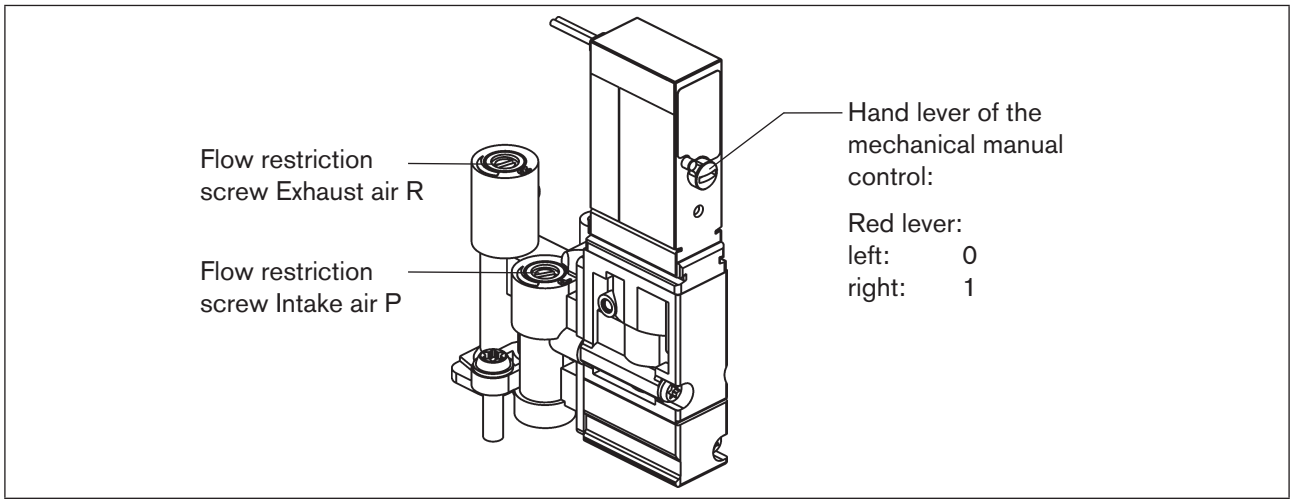

Fig. 6: Flow restriction screws of the solenoid valves

When setting the retraction and extension rates of the pneumatic actuator, ensure that there is no constant "primary pressure" during deaeration!

Keep in mind that the working conditions in the process valve area on the side of the product (flow types, pressure variations) may result in changes in the set aeration and deaeration times.

MAN 1000138479 EN Version: F Status: RL (released | freigegeben) printed: 10.05.2016

6.6. Position measuring system data

Stroke range (measuring range):	0 ... 80 mm
Resolution:	≤ 0.1 mm
Total error:	± 0.5 mm - when using a target in accordance with the dimensional drawing, Material 1.4021 and a piston rod (Ø 22 mm, Material - see **(*)** (Fault refers to the reproducibility of a taught position)

The diagram in "Fig. 7" shows the dimensional relationships between the control head and the piston with target.

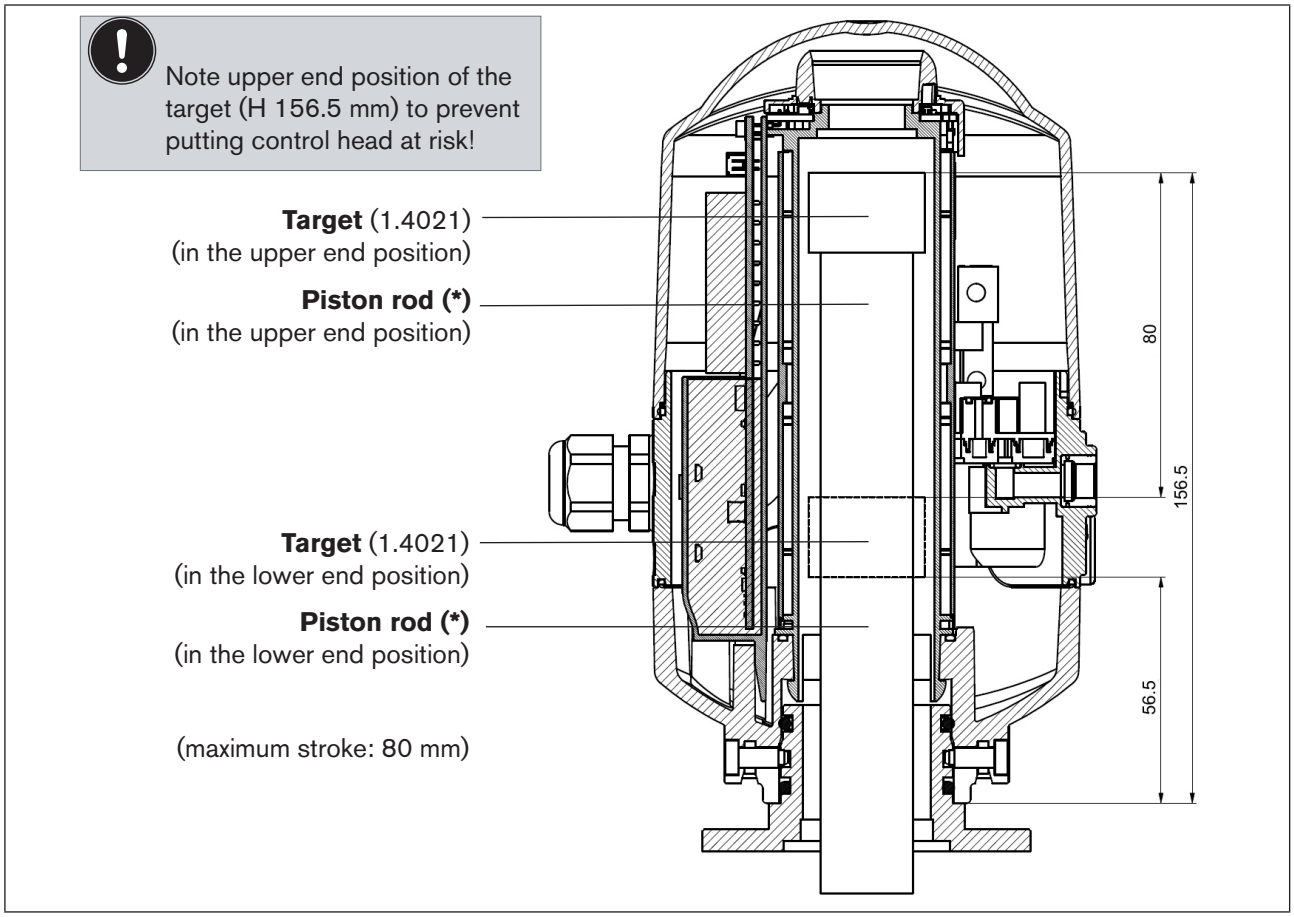

Fig. 7: Sectional view of control head and piston with target (in upper and lower end position)

(*) The fastening materials for target and piston rod, as well as the piston rod itself, may not be made of material with very good electrical conductivity (e.g. copper, aluminum) or of ferromagnetic material.
Stainless steel without ferromagnetic properties is suitable (if necessary, check after machining).

MAN 1000138479 EN Version: F Status: RL (released | freigegeben) printed: 10.05.2016

6.7. Factory settings in the firmware

The control head is supplied with the following factory settings of the firmware:

The service interface may only be used in non-explosive atmosphere.

6.7.1. Feedback fields (position measuring system)

A feedback field is the area within which a position (e.g. S1) is reported back.

Signal	Feedback field at top		Feedback field at bottom	
	Factory setting [mm]	Adjustment range [mm]	Factory setting [mm]	Adjustment range [mm]
S1	+ 3.00	+ 10.00 ... + 0.50	- 3.00	- 0.50 ... - 10.00
S2	+ 3.00	+ 10.00 ... + 0.50	- 3.00	- 0.50 ... - 10.00
S3	+ 1.00	+ 10.00 ... + 0.50	- 1.00	- 0.50 ... - 10.00

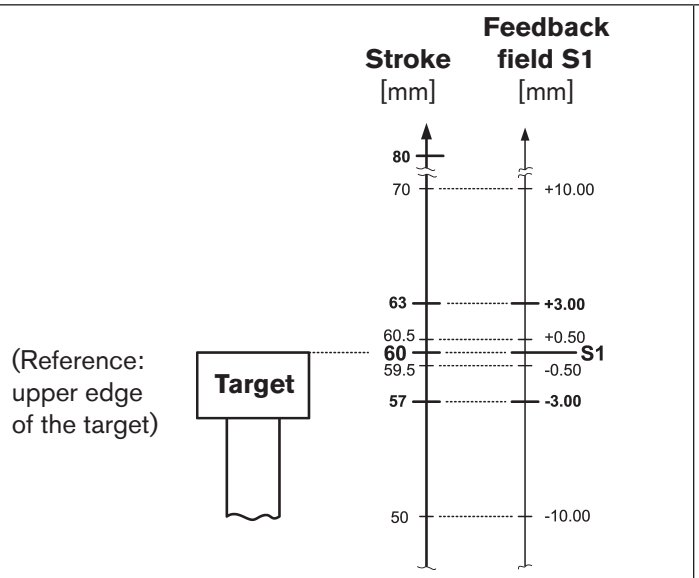

Ensure that the teach points including their feedback fields are within the measuring range.

Fig. 8: Schematic diagram (not to scale) of the feedback fields, using the example of position S1

Overlaps of S1/S2/S3 are possible (see Chapter “17.3. Signal priorities”).

Changes to the factory settings for the feedback fields are possible using the PC service program for the control head Type 8681.

MAN 1000138479 EN Version: F Status: RL (released | freigegeben) printed: 10.05.2016

CSI 417.831.1411 csidesigns.com

6.7.2. Service / maintenance notification (maintenance request)

Factory setting for the "Service/maintenance notification" function: **not active.**

When Service/maintenance notification is activated, this is indicated by a special blinking pattern - see Chap. “17.2. Blinking pattern & fault signaling” on page 82.

The Service/maintenance notification is used to observe predefined maintenance intervals which should occur either after an adjustable number of switching cycles or when a certain time has elapsed. The PC service program is used to adjust the service/maintenance interval (number of days or switching cycles) as well as activation/ deactivation of the "Service/maintenance notification" function.

Connection to the PC is via the Service interface - see “Fig. 9: Location of the Service interface on the electronics module”.
Details on the "Service" menu option are described in the "PC service program" manual.

Feedback, indicating that a service / maintenance is required (Service/maintenance notification), occurs when a Service/maintenance notification is activated after the following counter readings:

Counter readings (service interval)	Factory setting	Adjustment range
Switching cycle counter V1	10 000	(1 ... 255) x 1000
Switching cycle counter V2	50 000	(1 ... 255) x 1000
Switching cycle counter V3	50 000	(1 ... 255) x 1000
Operating duration	365 days	1 ... 65 535 days

The resettable operating hour and switching cycle counters are reset to "0" when a Device Reset occurs.

6.7.3. Manual control function (magnetic)

Factory setting for magnetic manual operation: **active.**

Deactivation is possible using the PC service program. Connection to the PC is via the Service interface - see “Fig. 9: Location of the Service interface on the electronics module”.
Details are described in the "PC service program" manual under the "SYSTEM/Start-up" menu option.

Compare also chapter “18.1. Magnetic manual control”.

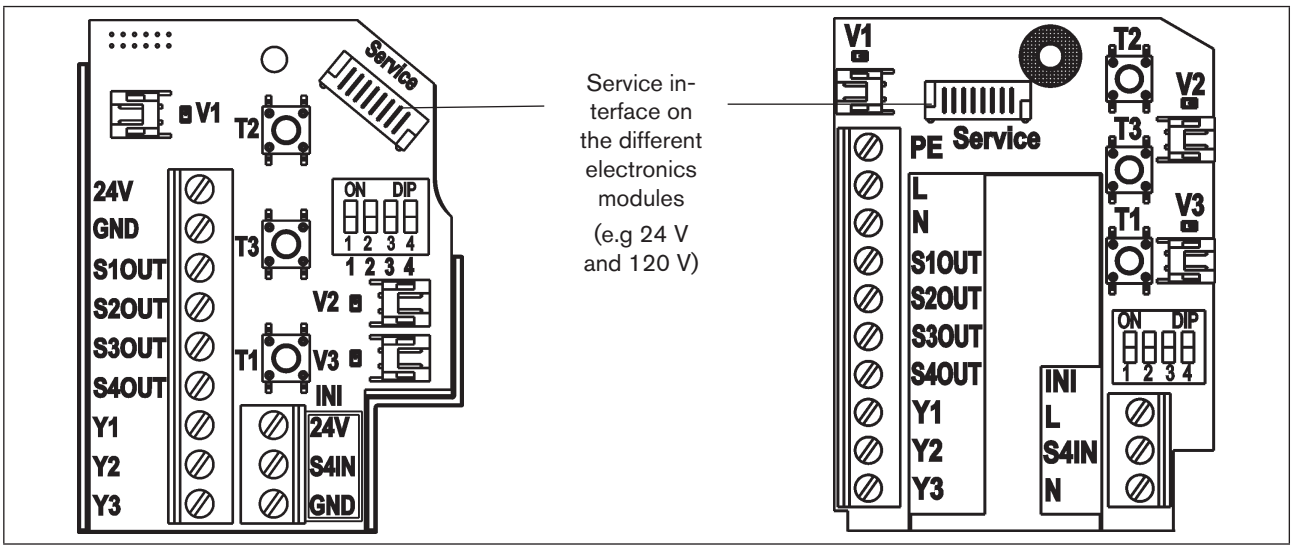

Fig. 9: Location of the Service interface on the electronics module

MAN 1000138479 EN Version: F Status: RL (released | freigegeben) printed: 10.05.2016

6.8. Resetting the device (Device Reset)

A restricted reset of the device to factory settings can be performed using the PC service program (see the "PC service program" manual) or directly on the control head.

Procedure:

→ Simultaneously actuate T1 + T2 + T3 (approx. 2.5 s long) - to access "Device Reset" mode - the corresponding blinking pattern is: always alternating 500 ms RED, 500 ms GREEN. If the device is not reset 10 s after switching to "Device Reset" mode, this mode is automatically left.

→ Simultaneously actuate T1 + T2 + T3 again (approx. 2.5 s long) - this will reset the device. The blinking pattern 250 ms ON / 250 ms OFF in the fault color indicates that the device was reset.

Device Reset resets the following values to the factory settings:

▪ Teach positions S1...S3	all positions "not taught"
▪ Feedback fields from S1...S3	(see Chapter "6.7.1" on page 25)
▪ Resettable switching cycle counters V1...V3	(see Chapter "6.7.2" on page 26)
▪ Resettable operating duration	(see Chapter "6.7.2" on page 26)
▪ Service intervals switching cycles V1...V3	(see Chapter "6.7.2" on page 26)
▪ Service interval operating duration	(see Chapter "6.7.2" on page 26)
▪ Service/maintenance notification (signaling of elapsed maintenance intervals)	inactive (see Chapter "6.7.2" on page 26)
▪ Manual control function	active (see Chapter "6.7.3" on page 26)
▪ External initiator S4 in = NO	(see Chapter "17.1" on page 82)
▪ Feedback external initiator S4 as S1	not active (see "PC service program" manual)

Device Reset does not reset the following values:

▪ Switching cycle counter Total V1...V3	
▪ Operating duration Total	
▪ Position measuring system averaging system	(see PC service program)
▪ AS-i address	(see chapter "11.8" on page 51)
▪ AS-i profile	
▪ DeviceNet Input Assembly	(see Chapter "12.11.1" on page 60)

MAN 1000138479 EN Version: F Status: RL (released | freigegeben) printed: 10.05.2016

CSI 417.831.1411 csidesigns.com

7. ASSEMBLY

7.1. Safety instructions

DANGER!

Risk of injury from high pressure in the system!

- Before loosening lines and valves, turn off the pressure and vent the lines.

WARNING!

Risk of injury due to electric shock!

- Before reaching into the system (except for the Teach-In procedure in a non-explosive atmosphere) switch off the power supply and secure it to prevent restarting!
- Observe applicable accident prevention and safety regulations for electrical equipment!

Risk of injury from improper assembly!

- Assembly may only be carried out by authorized technicians and with the appropriate tools!

Risk of injury from unintentional activation of the system and uncontrolled restart!

- Secure system against unintentional activation.
- Following assembly, ensure a controlled restart.

7.2. Assembly of the control head

The control head can be installed in any installation position, preferably with the hood face up.

The control head should be installed such that layers of dust thicker than 5 mm cannot form; meaning that such should be ensured through correspondingly regular cleaning.

When used in **explosive atmosphere (Zone 2)** the devices must be installed in a protected installation location according to IEC/EN 60079-0.

7.2.1. Hub flange

WARNING!

Risk of injury from improper assembly!

- Do not improperly stress the control head.
- Do not apply any leverage effect on the head and do not climb on it.
- When sealing the flange from the outside to the inside, make sure that the inflow of cleaning agent is considered and that the actuator space of the process valve towards the control head is sealed.

For the installation of the control head Type 8681 to a process valve, you will require a process valve-specific hub flange as an adapter.

The hub flange must be adapted to the design of the process valve and produce the mechanical connection between the process valve and the control head. The axial fastening is done by two locking screws (shoulder

MAN 1000138479 EN Version: F Status: RL (released | freigegeben) printed: 10.05.2016

screws M5), which engage in the middle groove of the hub flange (protection against pulling off).
The control head can radially slide into any position in 360° arc, seamlessly.

The hub flange and non ferromagnetic piston rod with the target that is used to record the position must comply with the specifications with regard to material and stability - see Chapter "6.6. Position measuring system data".

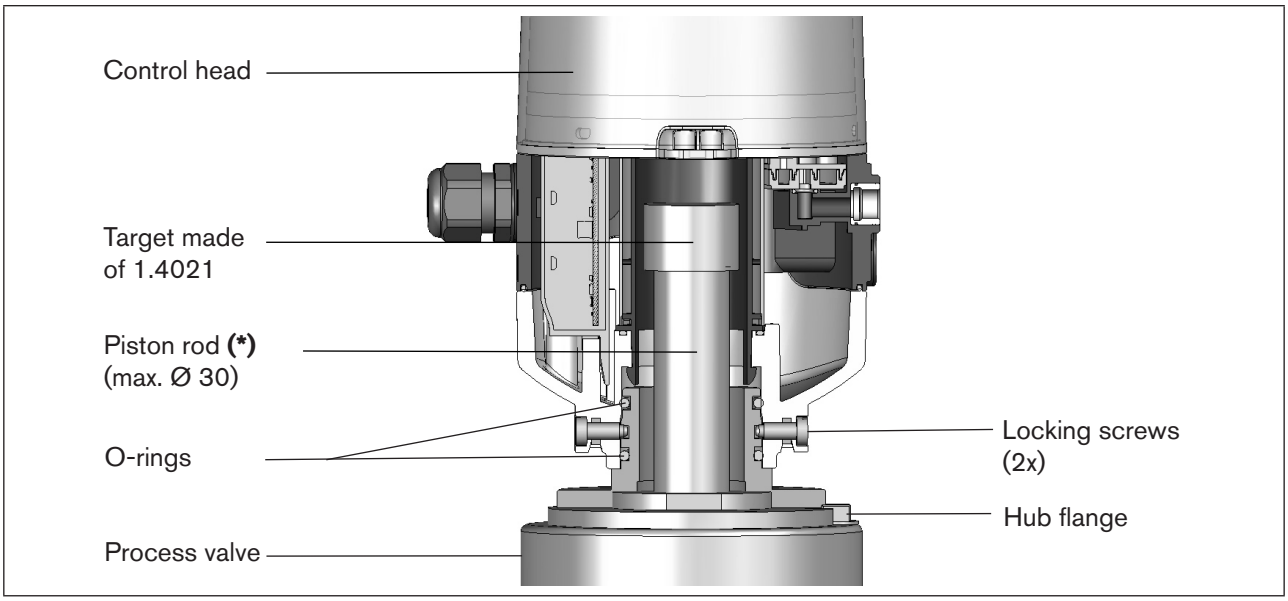

Fig. 10: Schematic diagram of the control head - process valve adaptation

(*) The fastening materials for target and piston rod, as well as the piston rod itself, may not be made of material with very good electrical conductivity (e.g. copper, aluminum) or of ferromagnetic material. Stainless steel without ferromagnetic properties is suitable (if necessary, check after machining).

- To ensure the proper function of the position measuring system, the axial deviation of the adapter must be less than ± 0.1 mm to the spindle when mounted!
- Use Bürkert adaptions exclusively.
- Prior to assembling the control head onto the hub flange, lightly grease the O-rings with a silicone grease.
- The hood must be lead-sealed in the explosion-risk area to prevent the housing from being opened without a tool!

For dimensional relationships, see also Chapter "6.6. Position measuring system data".

7.2.2. Assembly sequence on the example of a double-seated valve

Procedure:

→ Mount the piston rod with the target on the process valve spindle. Observe reference dimensions!

→ Fasten the hub flange on the process valve.
During this, observe central alignment and sealing conditions!

→ Check the secure fit of the sealing rings (in the upper and lower grooves).

MAN 1000138479 EN Version: F Status: RL (released | freigegeben) printed: 10.05.2016

→ Mount the control head on the hub flange (seamlessly 360° rotatable).

→ Secure control head with the two locking screws (shoulder screws M5) in the middle groove of the hub flange to prevent it from being pulled off the hub flange – tightening torque: max. 3.2 Nm (see "Fig. 10: Schematic diagram of the control head - process valve adaptation" and "7.2.3. Realignment of the control head").

7.2.3. Realignment of the control head

If necessary, the control head can be realigned, in particular if properly accessible installation of the pneumatic supply lines is not possible due to spatial conditions. This might also be required for operational aspects (accessibility of the manual control) and because of electrical connection possibilities.

Procedure:

→ Loosen the locking screws (shoulder screws M5) slightly until the underside of the screw head is flush with the auxiliary surface of the housing.

The locking screw has been loosened sufficiently when the lower side of the screw head is flush with the auxiliary surface of the housing.

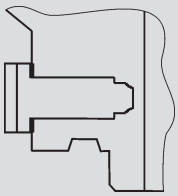

The locking screw is sufficiently tightened when the upper side of the screw head is flush with the auxiliary surface of the housing. Tightening torque: max. 3.2 Nm

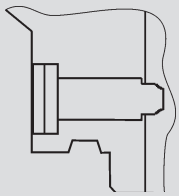

→ Rotate the control head until the desired alignment has been achieved.

→ Secure the control head with locking screws again until the upper side of the screw head is flush with the auxiliary surface of the housing. The locking screws have **no sealing function.** The control head is **not fixed in place** by the locking screws but is merely secured against being pulled off the hub flange.

7.2.4. Assembly of the pneumatic and electrical connections

Pneumatic installation

see Chapter "9. Pneumatic Installation"

Electrical installation

24 V DC:	see Chapter "10. 24 V DC - Design",
AS interface:	see Chapter "11. AS Interface - Design"
DeviceNet:	see Chapter "12. DeviceNet - Design"
120 V AC:	see Chapter "13. 120 V AC - Design"

7.2.5. Recommended auxiliary materials

Silicone grease for easy lubrication of the EPDM seals

MAN 1000138479 EN Version: F Status: RL (released | freigegeben) printed: 10.05.2016

8. OPENING AND CLOSING THE HOUSING

8.1. Safety instructions

DANGER!

Risk of injury from high pressure in the system!

- Before loosening lines and valves, turn off the pressure and vent the lines.

Danger of explosion in explosive atmosphere (only in the event of a fault as zone 2)!

- Opening the hood or the housing in an explosive atmosphere is only allowed in a not energized state!

WARNING!

Risk of injury due to electric shock!

- Before opening the hood and prior to reaching into the system (aside from a Teach-In procedure in a non-explosive atmosphere), switch off the power supply and secure to prevent restarting!
- Observe applicable accident prevention and safety regulations for electrical equipment!

Risk of injury from improper installation!

- Installation may be carried out by authorized technicians only and with the appropriate tools!

Risk of injury from unintentional activation of the system and uncontrolled restart!

- Secure system against unintentional activation.
- Following installation, ensure a controlled restart.

8.2. Opening and closing the housing

8.2.1. Opening the housing

NOTE!

Improper handling will damage the plastic hood / seal!

- Do not use excessive force (e.g. by knocks) for opening.
- Make sure that the lubricated seal contour is not soiled when the hood is placed down as this might reduce the IP protection!

Procedure:

→ Remove lead seal if housing is secured.

→ Open the plastic hood by turning counterclockwise (all the way, approx. 1.5 cm). Due to the tightness of the sealing, loosen the plastic hood by carefully tilting it laterally and lift it upwards to remove it.

CSI 417.831.1411 csidesigns.com

MAN 1000138479 EN Version: F Status: RL (released | freigegeben) printed: 10.05.2016

8.2.2. Closing the housing

If necessary, clean the seal contour of the seal and of the hood and lightly lubricate it using a silicone grease.

Caution:
Do not use any petroleum-based or synthetic lubricants (except for silicone grease)!

Procedure:

→ Put the plastic hood on the lower part such that the inner "lugs" are positioned over the locking grooves and the external sealing lugs are positioned almost over each other. Press the hood completely over the seal of the lower part.

→ Turn the hood by approx. 1.5 cm clockwise (meaning until the sealing lugs are positioned over each other).

→ If necessary, apply a lead seal to prevent opening without a tool.

The hood must be lead-sealed in the explosion-risk area to prevent the housing from being opened without a tool!

MAN 1000138479 EN Version: F Status: RL (released | freigegeben) printed: 10.05.2016

9. PNEUMATIC INSTALLATION

9.1. Safety instructions

DANGER!

Risk of injury from high pressure in the system!

- Before loosening lines and valves, turn off the pressure and vent the lines.

WARNING!

Risk of injury from improper installation!

- Installation may be carried out by authorized technicians only and with the appropriate tools!

Risk of injury from unintentional activation of the system and uncontrolled restart!

- Secure system against unintentional activation.
- Following installation, ensure a controlled restart.

9.2. Pneumatic connection of the control head

DANGER!

Risk of injury from high pressure in the system!

- Before loosening lines and valves, turn off the pressure and vent the lines.

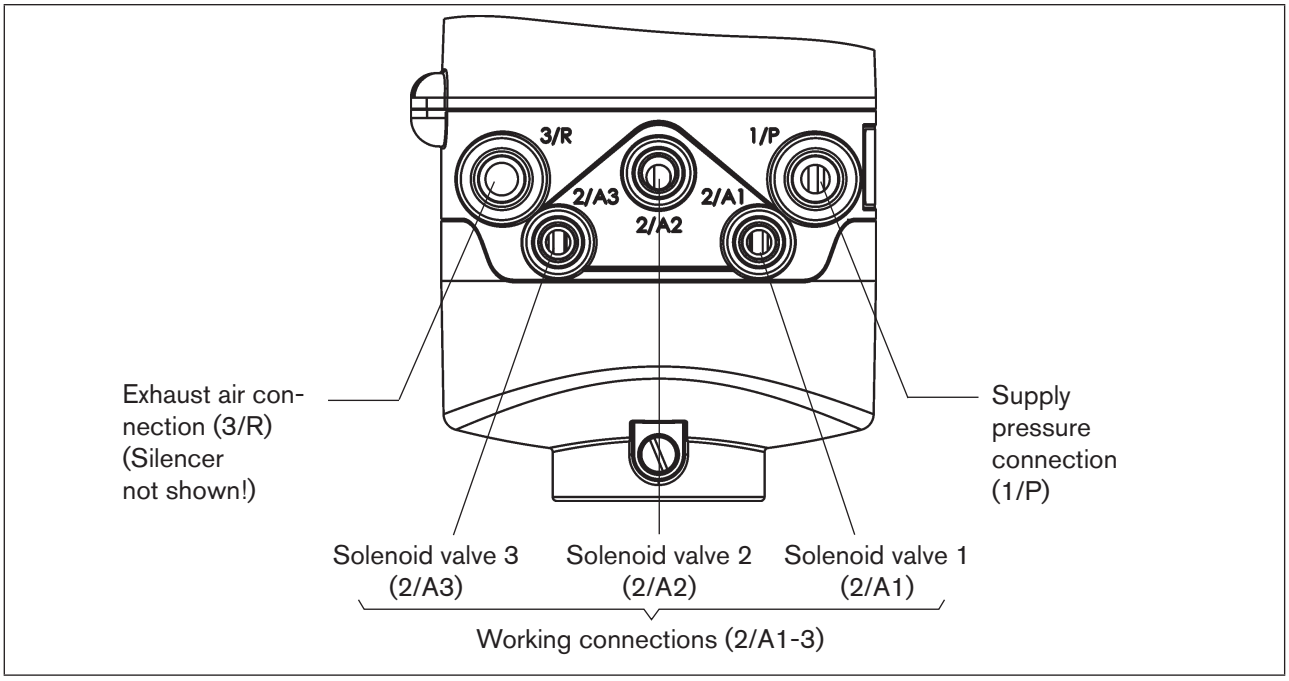

Fig. 11: Pneumatic connection

MAN 1000138479 EN Version: F Status: RL (released | freigegeben) printed: 10.05.2016

CSI 417.831.1411 csidesigns.com

Procedure:

→ If required, realign the control head (see Chapter "7.2.3. Realignment of the control head").

→ A silencer has already been mounted on the Exhaust Air Connection (3/R) in the supplied state. As needed, the silencer can be replaced by an exhaust air hose (e.g. after screwing in an appropriate plug-in hose connectors).

→ Connect the required working connections 2/A1 to 2/A3 (each according to model) with the corresponding connections on the process valve.

→ Connect the supply line to supply pressure connection 1/P (2.5 … 8 bar).

NOTE!

Hose pipes!

- Only use approved hose pipes with ∅6 mm (or 1/4") or ∅8 mm (or 5/16") outer diameters (tolerance: +0.05/-0.1 mm).
- Only use a suitable hose cutter when cutting hose pipes. This will safeguard against damage and impermissible deformation.
- Accordingly dimension hose length to prevent that the hose ends in the plug-in hose connectors generate any diagonally pulling stresses (curved outlet without eccentric stress).
- Only use suitable hose qualities (in particular for high ambient temperatures) that bear up under common stresses caused by the quick connector.

Silencer or exhaust air hose!

- When using an exhaust air hose, accordingly dimension its length to ensure that a QNn value > 620 l/min is reached.

Tip:
Dimension the hose lengths so that the control head can be removed from the process valve if required without any additional disassembly work.

9.3. Flow restriction function of the solenoid valves

Set the flow restriction screws of the solenoid valves only when needed and after completion of all necessary installations!

The flow restriction screws of the solenoid valves (see "Fig. 12") are used for setting the air intake and exhaust for the working connections:

- Factory setting: QNn approx. 110 l/min.
- The flow restriction screws do not serve any sealing function.
- Only tighten the flow restriction screws to the stopper, otherwise damage to device may occur.
- Only use appropriate screwdrivers (b ≤ 3 mm).

MAN 1000138479 EN Version: F Status: RL (released | freigegeben) printed: 10.05.2016

Settings of the flow-rate or the control speed with the help of the flow restriction screws:

→ Open the housing following the instructions in Chapter "8. Opening and Closing the Housing".

→ For proper setting, it is advisable to turn the two flow restriction screws initially into the minimum flow-rate position. The process valve will then initially move slowly so that you have more time to find the optimum setting during a switching operation.

Minimizing the flow rate:	Turn clockwise
Maximizing the flow rate:	Turn counterclockwise

→ Observing the safety guidelines, activate the valve location to be set (either using the system control or the manual controls).

→ Turn the flow restriction screw "P" counterclockwise to set the required flow rate and therefore the opening time for the process valve. (Tool: flat-blade screwdriver, width ≤ 3 mm).

→ Deactivate valve location.

→ Turn the flow restriction screw "R" counterclockwise to set the required flow rate and therefore the closing time for the process valve.

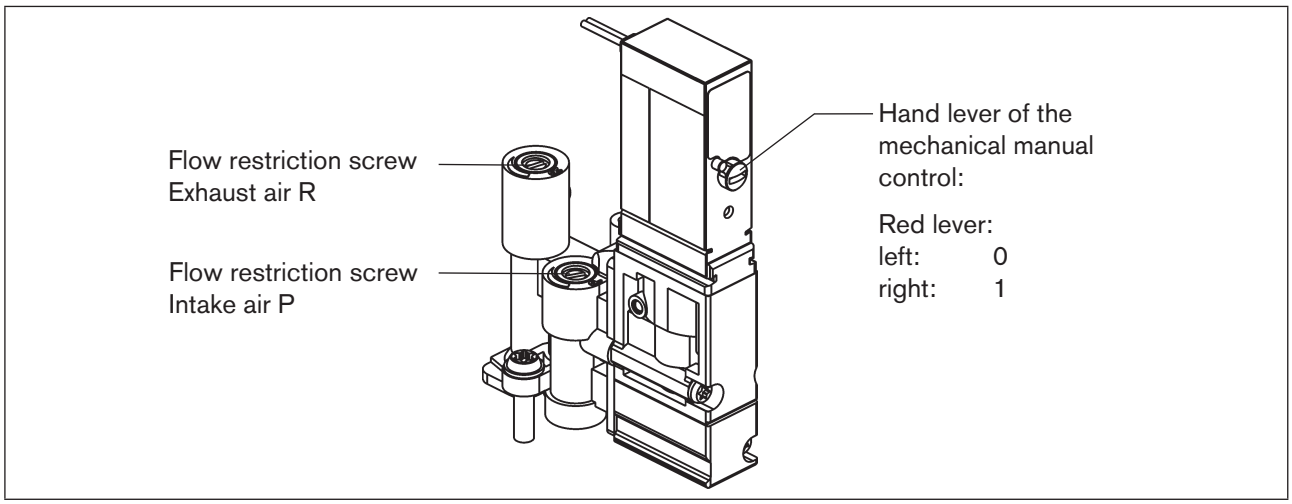

Fig. 12: Flow restriction screws of the solenoid valves

NOTE!

- Makes sure that all manual controls have been deactivated (hand lever all the way left, as pictured) after the setting work has been completed!

→ If no further installation work is required, close the housing following the instructions in Chapter "8. Opening and Closing the Housing".

If no system status is available during setting, readjust the system under system operation conditions if necessary.

Observe the safety guidelines during this!

MAN 1000138479 EN Version: F Status: RL (released | freigegeben) printed: 10.05.2016

CSI 417.831.1411 csidesigns.com

10. 24 V DC - DESIGN

10.1. Electrical connection options

The following connection concepts are available for the electrical connection of the control head:

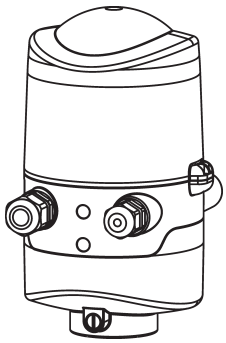	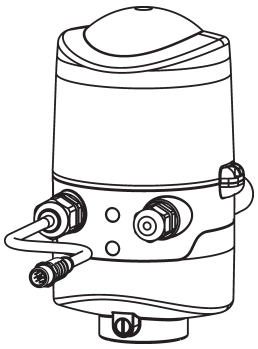
Cable gland	**Cable gland with multi-pole connection** (M12 plug according to IEC 61076-2-101, 12-pole)
Connection left: Voltage, signals Connection right: external initiator	Connection left: Voltage, signals Connection right: external initiator

Fig. 13: Connection concepts 24 V DC

10.2. Electrical data

Power supply: 12 ... 28 V DC, residual ripple 10%

Connections:

Cable gland variant

1 x M16 x 1.5 cable gland/SW22 - for power supply and signals, (only for transportation safety device sealed with dummy plugs, remove these before use!)
for cable diameter 5 ... 10 mm,
for wire cross-sections 0.14 ... 1.5 mm^2

1 x M16 x 1.5 cable gland/SW19 - connection option for external initiator (sealed with dummy plug, remove these before use)

Multi-pole connection variant

1 x M16 x 1.5 cable gland / SW22 with multi-pole connection (M12 plug according to IEC 61076-2-101, 12-pole on a cable of 8 cm length for power supply and signals)

1 x M16 x 1.5 cable gland/SW19 - connection option for external initiator (sealed with dummy plug, remove these before use)

Power consumption (standby current): 30 mA at 24 V DC

MAN 1000138479 EN Version: F Status: RL (released | freigegeben) printed: 10.05.2016

Solenoid valves:

Max. switching capacity:	max. 0.9 W (per solenoid valve)
Typ. continuous output:	0.6 W (per solenoid valve)
Power consumption per solenoid valve:	50 mA at 12 V DC 25 mA at 24 V DC 22 mA at 28 V DC
Operating mode:	Long-term operation (100% ED)

Central display of switching states: 42 mA with a power supply of 24 V DC per illuminated display; color switching see Chapter "17. LED Color Assignments"

Outputs/binary feedback signals: S1 out - S4 out

Design:	Normally open contact, PNP output short-circuit-proof, with self-clocking short-circuit protection
Switchable output current:	max. 100 mA per feedback signal
Output voltage - active:	≥ (operating voltage - 2 V)
Output voltage - inactive:	max. 1 V in unloaded state

Input / proximity switches (external initiator: S4 in):

Power supply:	Voltage present at the control head - 10%
Current carrying capacity sensor supply:	max. 90 mA
Short-circuit protection	
Design:	DC 2- and 3-conductor, NO or NC (factory setting NO), PNP output
Input current 1 signal:	I_{Sensor} > 6.5 mA, limited internally to 10 mA
Input voltage 1 signal:	U_{Sensor} > 10 V
Input current 0 signal:	I_{Sensor} < 4 mA
Input voltage 0 signal:	U_{Sensor} < 5 V

Inputs valve actuation (Y1 - Y3):

Signal level - active:	U > 10 V, max. 24 V DC + 10%
Signal level - inactive:	U < 5 V
Impedance:	> 30 kOhm

MAN 1000138479 EN Version: F Status: RL (released | freigegeben) printed: 10.05.2016

CSI 417.831.1411 csidesigns.com

10.3. Design aid

Power consumption of the electronics:								
P_{El}	=	0.7 W	or	I_{El}	=	30 mA	at	24 V
Power consumption of a valve during activation (200 ms):								
$P_{Valve\text{-}ON}$	=	0.9 W	or	$I_{Valve\text{-}ON}$	=	38 mA	at	24 V
Power consumption of a valve after reduction:								
P_{Valve}	=	0.6 W	or	I_{Valve}	=	25 mA	at	24 V
Power consumption of an optical position report:								
P_{LED}	=	1.0 W	or	I_{LED}	=	42 mA	at	24 V

Also, if several control head valves were to be opened simultaneously, the switch signal will be sent staggered to the valves. Only *one* 0.9 W valve will ever be recorded.

Calculation examples:

Example 1: 3 valves are activated simultaneously, one position is reported (state for 200 ms):								
P_{Total}	=	P_{El}	+	1 x $P_{Valve\text{-}ON}$	+	2 x P_{Valve}	+	1 x P_{LED}
3.8 W	=	0.7 W	+	1 x 0.9 W	+	2 x 0.6 W	+	1 x 1.0 W
or								
I_{Total}	=	I_{El}	+	1 x $I_{Valve\text{-}ON}$	+	2 x I_{Valve}	+	1 x I_{LED}
160 mA	=	30 mA	+	1 x 38 mA	+	2 x 25 mA	+	1 x 42 mA

Example 2: 3 valves have been activated simultaneously, one position is reported (persistent state):								
P_{Total}	=	P_{El}	+	3 x P_{Valve}	+	1 x P_{LED}		
3.5 W	=	0.7 W	+	3 x 0.6 W	+	1 x 1.0 W		
or								
I_{Total}	=	I_{El}	+	3 x I_{Valve}	+	1 x I_{LED}		
147 mA	=	30 mA	+	3 x 25 mA	+	1 x 42 mA		

When using an external initiator, its power requirement should be added.

MAN 1000138479 EN Version: F Status: RL (released | freigegeben) printed: 10.05.2016

10.4. Safety instructions

DANGER!

Danger of explosion in explosive atmosphere (only in the event of a fault as zone 2)!

- Opening the hood or the housing in an explosive atmosphere is only allowed in a not energized state!

WARNING!

Risk of injury due to electric shock!

- Before reaching into the system (except for the Teach-In procedure in a non-explosive atmosphere) switch off the power supply and secure it to prevent restarting!
- Observe applicable accident prevention and safety regulations for electrical equipment!
- When setting the position measuring system (Teach-In), do not contact any live components!

Risk of injury from improper installation!

- Installation may be carried out by authorized technicians only and with the appropriate tools!

Risk of injury from unintentional activation of the system and uncontrolled restart!

- Secure system against unintentional activation.
- Following installation, ensure a controlled restart.

10.5. Electrical installation / start-up

10.5.1. Cable gland with screw terminals

Procedure:

→ Open the housing following the instructions in Chapter "8. Opening and Closing the Housing".

→ Assemble connection cables for signals and power supply as well as for the external initiator where necessary in observance of the rules of technology.

→ Insert cables through the respective cable glands into the interior of the housing.

→ Connect the wires to the connection terminals according to the connection configuration described in "Fig. 14".

If required, secure the cable with a cable clip!

→ Close the housing following the instructions in Chapter "8. Opening and Closing the Housing".

NOTE!

Ensure IP protection!

- To ensure IP protection, the union nuts of the cable glands must be tightened in accordance with the cable sizes or dummy plugs used (approx. 1.5 Nm).
- If no external initiator is used, the right-hand connection opening must be tightly sealed using a dummy plug or using a cable gland (SW 19, Ø 3 - 6 mm) with a dummy plug (Ø 5 - 6 mm)!

MAN 1000138479 EN Version: F Status: RL (released | freigegeben) printed: 10.05.2016

NOTE!

Use of the control head in explosive atmosphere

- Only use cables and cable glands which are approved for the respective application area and fit the cable glands according to the respective operating instructions!
- Close all unnecessary openings with lock screws/plugs approved for explosions area!

24 V DC Electronics module, terminal strip configuration:

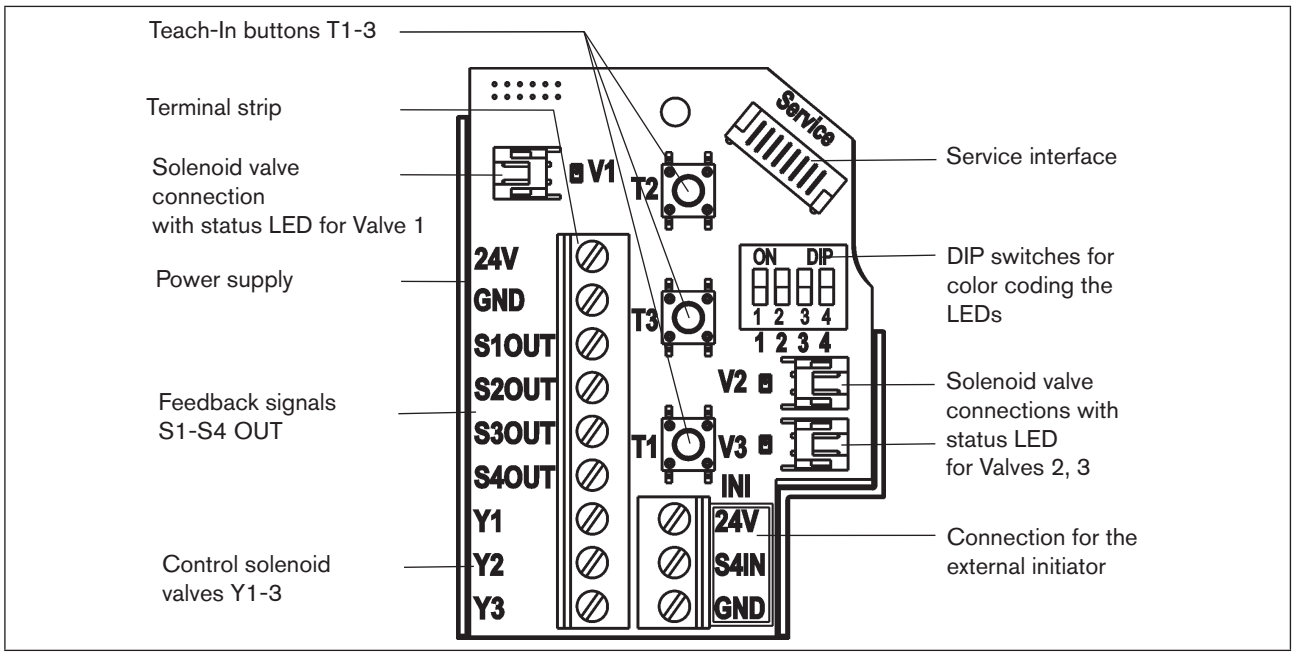

Fig. 14: 24 V DC electronics module

Designation Terminal strip	Configuration
24 V	Power supply 24 V
GND	GND
S1 OUT	Output position 1
S2 OUT	Output position 2
S3 OUT	Output position 3
S4 OUT	External initiator output
Y1	Solenoid valve 1 input
Y2	Solenoid valve 2 input
Y3	Solenoid valve 3 input

Designation Terminal strip	Configuration
24 V	Power supply 24 V for external initiator
S4 IN	External initiator input
GND	GND external initiator

MAN 1000138479 EN Version: F Status: RL (released | freigegeben) printed: 10.05.2016

Circuit diagram 24 V DC:

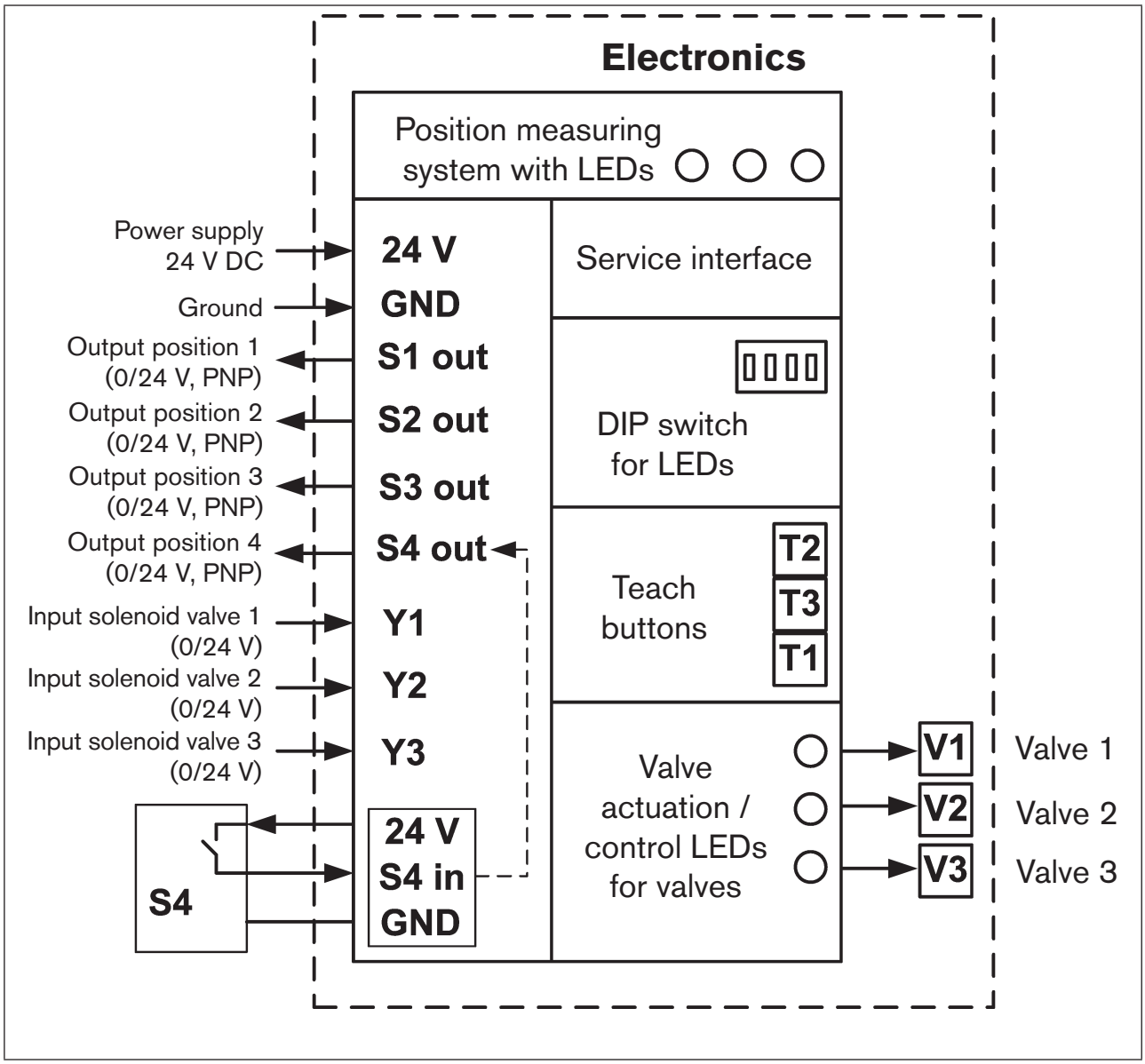

Fig. 15: Circuit diagram 24 V DC

MAN 1000138479 EN Version: F Status: RL (released | freigegeben) printed: 10.05.2016

CSI 417.831.1411 csidesigns.com

10.5.2. Multi-pole connection

Internal cabling work is not required for models with multi-pole connection, which makes installation and start-up on site considerably easier and quicker, reducing the risk of leaks. However, you will require the correspondingly packaged or assembled cable sets with the following pin assignment:

Input and output signals to the higher-level control (PLC):
12-pole circular plug-in connector M12 x 1.0 - male (acc. to IEC 61076-2-101)

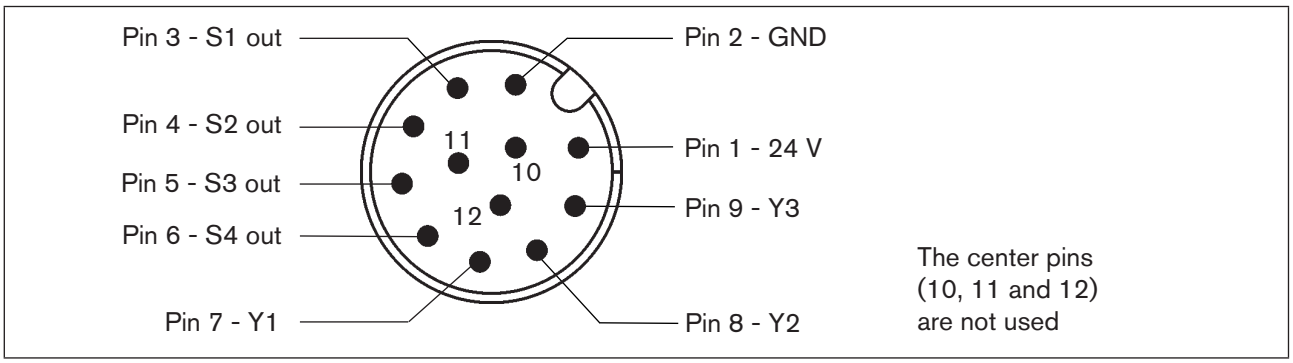

Fig. 16: 12-pole multi-pole connection (view onto the plug pins)

Pin	Designation	Configuration
1	24 V	Power supply 24 V
2	GND	GND
3	S1 out	Output position S1
4	S2 out	Output position S2
5	S3 out	Output position S3
6	S4 out	External initiator output S4
7	Y1	Solenoid valve 1 input
8	Y2	Solenoid valve 2 input
9	Y3	Solenoid valve 3 input
10		Not used
11		Not used
12		Not used

MAN 1000138479 EN Version: F Status: RL (released | freigegeben) printed: 10.05.2016

11. AS INTERFACE - DESIGN

11.1. Definition

AS interface connection

AS interface (Actuator Sensor Interface) is a field bus system which is used primarily for networking binary sensors and actuators (slaves) with a higher-level control (master).

Connecting the control heads to higher bus systems is possible using commercially available gateways. Contact your distribution partner in this regard.

Bus line

Unshielded two-wire line (AS interface line as AS interface cable harness) along which both information (data) and energy (power supply for the actuators and sensors) are transmitted.

Network topology

Freely selectable within wide limits, i.e. star, tree and line networks are possible. Further details are described in the AS interface specification (A/B slave model complies with the version 3.0 specification).

The control heads have been configured as AS interface version with an extended address range (A/B slaves) for 62 slaves or optionally as an AS interface version for 31 slaves. For details, see Chapter “11.8. Programming data”.

MAN 1000138479 EN Version: F Status: RL (released | freigegeben) printed: 10.05.2016

CSI 417.831.1411 csidesigns.com

11.2. Electrical connection options for AS interface

The following connection concepts are available for the electrical connection of the control head:

- Cable gland with multi-pole connection on a cable (8 cm length)
- Cable gland with multi-pole connection on a cable (80 cm length)

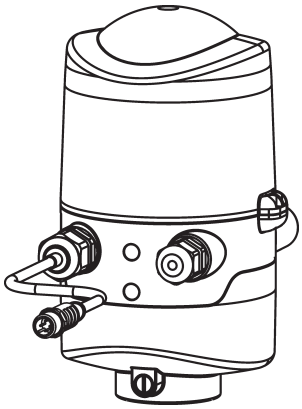	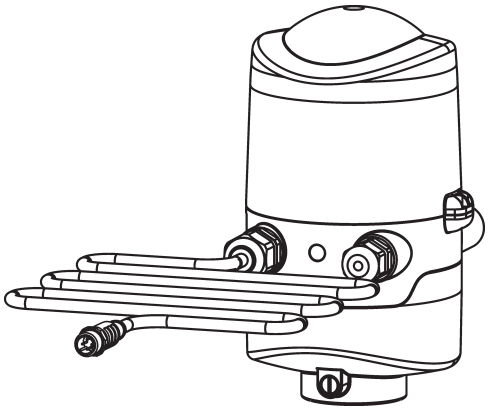
with multi-pole connection (M12 plug according to IEC 61076-2-101, 4-pole) **to 8 cm cable**	**with multi-pole connection** (M12 plug according to IEC 61076-2-101, 4-pole) **to 80 cm cable**
Connection left: AS interface Connection right: external initiator	Connection left: AS interface Connection right: external initiator

Fig. 17: AS interface connection concepts

11.3. Number of connectable control heads and maximum length of the bus line

The bus cable may be a maximum of 100 m long. All AS interface lines of an AS interface string must be considered for the design, i.e. even the drop lines to the individual slaves.

The level of expansion that is actually possible depends on the total number of all individual operating currents for each control head, which are supplied via the bus at the common AS interface bus segment (see example calculation).

Standard: AS interface/62 slaves (AS interface version with extended addressing range (A/B slave))

In AS interface versions with extended addressing range (A/B slave), 1 master can communicate with 62 slaves.

Option: AS interface/31 slaves (AS interface version with 31 slave addressing range)

In this case, a maximum of 31 control heads can be connected to a bus line (address range restriction).

MAN 1000138479 EN Version: F Status: RL (released | freigegeben) printed: 10.05.2016

Table of calculated line length of the control head versions:

When designing the system, consider the length of the round cable leading directly to the control head (see following table and example calculation).

Model	Calculated line length (including internal cabling)
Multi-pole (cable 8 cm)	0.3 m
Multi-pole (cable 80 cm)	1.0 m

Example:

for multi-pole connection with 8 cm cable:
When using 62 control heads, the AS interface cable harness may still be (100 m - 62 * 0.3 m) = 81.4 m long.

If the calculated line length of 100 m were to be exceeded, a commercially available AS interface repeater may be used, as needed.

Observe maximum power supply via certified AS interface power supply units ≤ 8 A!
For details see AS interface specification.

Observe the optional design "AS Interface with External Power Supply" to reduce the load on the AS interface bus segment! (see Chapters "11.4" and "11.7")

Use cables according to the AS interface specification.
If other cables are used, the maximum cable length will change.

11.4. Electrical data

Comments / notes:

Outputs (from master perspective):	0 to 3 solenoid valves
Inputs (from master perspective):	3 binary feedback signals and 1 external initiator
Watchdog:	If bus communication fails for more than 50 to 100 ms, the outputs are set to 0

Setting the solenoid valves' power supply using jumpers on the AS interface electronics module:

Via AS interface	Externally (Connection see Chapter "11.7. Electrical installation of the AS interface")
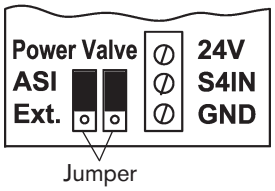	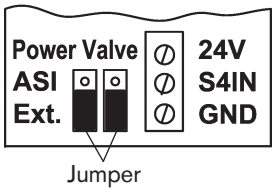

Fig. 18: Jumper settings for power supply via AS interface or for external power supply

The control head Type 8681 was developed according to the Complete Specification (V.3.0) and the Profile S-7.A.E and S-7.F.F of the AS International Association.

MAN 1000138479 EN Version: F Status: RL (released | freigegeben) printed: 10.05.2016

Connections:

Multi-pole connection version:	1 x M16 x 1.5 cable gland / SW19 with multi-pole connection (M12 plug according to IEC 61076-2-101, 4-pole on a cable of 8 or 80 cm length for power supply and signals)
	1 x M16 x 1.5 cable gland/SW19 - connection option for external initiator (sealed with dummy plug, remove these before use)
Power supply:	29.5 ... 31.6 V DC (according to specification) 21.0 ... 31.6 V DC (according to specification Power24)

Input / proximity switches (external initiator: S4 in):

Power supply:	AS interface voltage present at control head - 10%
Current carrying capacity, sensor power supply:	max. 30 mA
Short-circuit protection design:	DC 2- and 3-conductor, NO or NC (factory setting NO), PNP output
Input current 1 signal:	I_{Sensor} > 6.5 mA, limited internally to 10 mA
Input voltage 1 signal:	U_{Sensor} > 10 V
Input current 0 signal:	I_{Sensor} < 4 mA
Input voltage 0 signal:	U_{Sensor} < 5 V

Inputs (from master perspective) / binary feedback signals:
The recovery of the 3 valve positions reported back in binary format is described in Chapter “16” on page 75.

Outputs (from master perspective) / solenoid valves:

Max. switching capacity:	max. 0.9 W (per solenoid valve)
Typ. continuous output:	0.6 W (per solenoid valve)
Watchdog function:	integrated
Output reduction:	via AS interface - electronics integrated
Pull-in current:	30 mA or 0.9 W/200 ms (at 30.5 V AS-i voltage)
Holding current:	20 mA or 0.6 W (at 30.5 V AS-i voltage)
Operating mode:	Long-term operation (100% ED)
Valve type:	Type 6524

Central display of the switching states:

Power consumption from AS interface at 30.5 V AS interface voltage:	max. 33 mA or 1 W per illuminated display
Number of representable colors:	2 colors for process valve switching states 1 color for signaling a fault For "universal color switching" see Chapter”17. LED Color Assignments”.

Power supply via AS interface bus (without external power supply):

Max. power consumption from AS-i:	200 mA (incl. external initiator with 30 mA)
Power consumption during normal operation from the AS-i (after current reduction):	≤ 150 mA 3 valves activated, 1 position reported back by LED display, no external initiator
Integrated short-circuit protection	

MAN 1000138479 EN Version: F Status: RL (released | freigegeben) printed: 10.05.2016

NOTE!

If all 3 solenoid valves are simultaneously controlled via the AS interface, the electronics will activate the valves sequentially with a 200 ms time delay to protect the bus from overloads.

Please observe the notes on power requirement and maximum expansion stage of the AS interface network contained in Chapter *11.3. Number of connectable control heads and maximum length of the bus line* and in the AS-i specifications, where applicable.

External power supply for solenoid valves:

External power supply:	19.2 V DC to 31.6 V DC The power supply unit must include a secure disconnect in accordance with IEC 364-4-41. It must conform to the SELV standard. The ground potential must not have a ground connection.
Max. power consumption from external power supply for outputs (solenoid valves) - without integrated current limiting:	≤ 110 mA at 24 V DC
Max. power consumption from AS-i for inputs and display:	≤ 150 mA type.
Integrated short-circuit protection	

Please follow the instructions on power requirement and maximum expansion stage of the AS interface network in Chapter "11.3. Number of connectable control heads and maximum length of the bus line" and in the AS interface specifications, where applicable.

11.5. Design aid

Design aid for supply of the valves via the AS-i bus

Power consumption of the electronics:								
P_{El}	=	1.0 W	or	I_{El}	=	33 mA	at	30.5 V
Power consumption of a valve during activation (200 ms):								
$P_{Valve\text{-}ON}$	=	0.9 W	or	$I_{Valve\text{-}ON}$	=	30 mA	at	30.5 V
Power consumption of a valve after reduction:								
P_{Valve}	=	0.6 W	or	I_{Valve}	=	20 mA	at	30.5 V
Power consumption of an optical position report:								
P_{LED}	=	1.0 W	or	I_{LED}	=	33 mA	at	30.5 V

For the design of the **maximum line lengths** observe Chapter "11.3. Number of connectable control heads and maximum length of the bus line".

CSI 417.831.1411 csidesigns.com

Also, if several control head valves were to be opened simultaneously via the bus, the switch signal will be sent staggered to the valves. Only *one* 0.9 W valve will ever be recorded.

Calculation examples:

Example 1: 3 valves are activated simultaneously, one position is reported (state for 200 ms):									
P_{Slave}	=	P_{El}	+	1 x $P_{Valve\text{-}ON}$	+	2 x P_{Valve}	+	1 x P_{LED}
4.1 W	=	1.0 W	+	1 x 0.9 W	+	2 x 0.6 W	+	1 x 1.0 W
or								
I_{Slave}	=	I_{El}	+	1 x $I_{Valve\text{-}ON}$	+	2 x I_{Valve}	+	1 x I_{LED}
136 mA	=	33 mA	+	1 x 30 mA	+	2 x 20 mA	+	1 x 33 mA

Example 2: 3 valves have been activated simultaneously, one position is reported (persistent state):						
P_{Slave}	=	P_{El}	+	3 x P_{Valve}	+	1 x P_{LED}
3.8 W	=	1.0 W	+	3 x 0.6 W	+	1 x 1.0 W
or						
I_{Slave}	=	I_{El}	+	3 x I_{Valve}	+	1 x I_{LED}
126 mA	=	33 mA	+	3 x 20 mA	+	1 x 33 mA

When using an external initiator, its power requirement should be added.

11.6. Safety instructions

DANGER!

Danger of explosion in explosive atmosphere (only in the event of a fault as zone 2)!

- Opening the hood or the housing in an explosive atmosphere is only allowed in a not energized state!

WARNING!

Risk of injury due to electric shock!

- Before reaching into the system (except for the Teach-In procedure in a non-explosive atmosphere) switch off the power supply and secure it to prevent restarting!
- Observe applicable accident prevention and safety regulations for electrical equipment!

Risk of injury from improper installation!

- Installation may be carried out by authorized technicians only and with the appropriate tools!

Risk of injury from unintentional activation of the system and uncontrolled restart!

- Secure system against unintentional activation.
- Following installation, ensure a controlled restart.

MAN 1000138479 EN Version: F Status: RL (released | freigegeben) printed: 10.05.2016

11.7. Electrical installation of the AS interface

Internal cabling work is not required for any of the AS Interface designs with multi-pole connection, which makes installation and start-up on site considerably easier and quicker, reducing the risk of leaks.

However, you will require the correspondingly assembled cable sets with the following pin assignments. Likewise, the jumpers on the electronics module must be set correspondingly (see figures below).

NOTE!

Use of the control head in explosive atmosphere

- Only use cables and cable glands which are approved for the respective application area and fit the cable glands according to the respective operating instructions!
- Close all unnecessary openings with lock screws/plugs approved for explosions area!

Bus connection for AS interface (power supply for solenoid valves via bus/external power supply) M12 x 1 circular plug, 4-pole, male (according to IEC 61076-2-101)

(view of the M12 plug, from the front onto the pins)

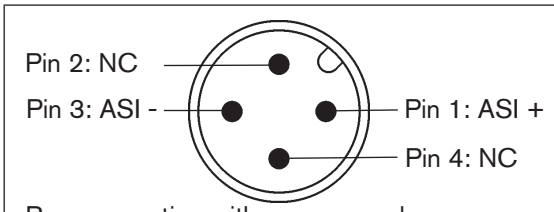

Bus connection with power supply for solenoid valves via bus

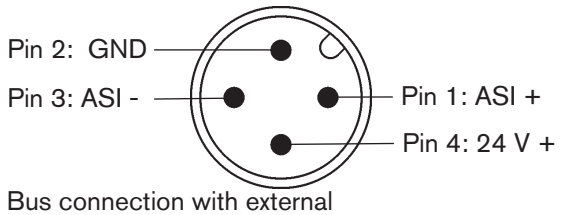

Bus connection with external power supply via solenoid valves

Fig. 19: AS interface bus connection (power supply for solenoid valves via bus/external power supply)

Pin	Configuration (supply via bus)	Configuration (external power supply)	Wire color
1	AS interface - ASI+	AS interface - ASI +	brown
2	Not used	GND	white
3	AS interface - ASI –	AS interface - ASI –	blue
4	Not used	24 V +	black

Power supply to the solenoid valves via the bus	External power supply to the solenoid valves
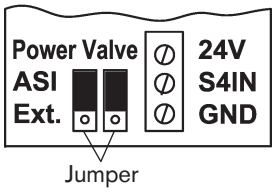	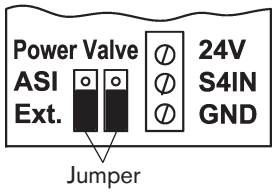

Fig. 20: Jumper setting on AS-i electronics module: Power supply to the solenoid valves via the bus or externally

The cable with multi-pole connection version is especially suited for direct and flexible connection to the AS interface cable harness using the ribbon cable terminal (M12 branch circuit, VA branch circuit) that is optionally available.

CSI 417.831.1411 csidesigns.com

The optional ribbon cable terminal contacts the AS interface cable harness by means of penetration technology which allows installation by "clipping in" the AS interface cable harness without cutting and without removing insulation.

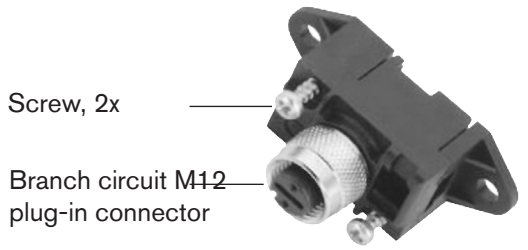

Procedure:

→ Open the ribbon cable terminal (loosen screws and remove cover)

→ Insert cable harness

→ Close ribbon cable terminal again

→ Tighten the screws
Loosen the thread-forming screws slightly and position them on the existing threaded hole and screw in.

Fig. 21: Optional ribbon cable terminal for AS interface cable harness

AS interface electronics module - LED status displays:

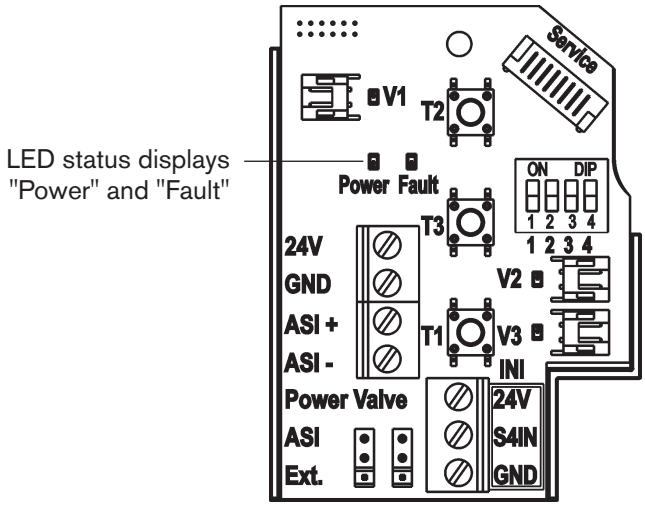

Fig. 22: LED status displays on the AS-i electronics module

LED 1 "Power" (green)	LED 2 "Fault" (red)	signalized status
off	off	Power OFF
on	on	No data traffic (expired Watchdog at slave address does not equal 0)
on	off	OK
flashing	on	Slave address = 0
flashing	flashing	Sensor supply overload / manual actuation activated / untaught / service/ maintenance request / PC service program service mode

The central illuminated display flashes in the fault color (see Chapter "17.2. Blinking pattern & fault signaling"), if the status LED 2 "Fault" is active.

MAN 1000138479 EN Version: F Status: RL (released | freigegeben) printed: 10.05.2016

11.8. Programming data

The control heads have been configured as AS interface version with an extended address range (A/B slaves) for 62 slaves or optionally as an AS interface version for 31 slaves.

A change between the two configurations in the control head is only possibly by exchanging the electronic PCB!

If one control head is replaced with another control head having a different configuration in the AS interface field bus system (e.g. AS interface version 62 slaves (A/B-Slave) to replace a device with AS interface version 31 slaves), a configuration error will be generated at the master due to the different ID codes!

In this case (intentional replacement!), the current configuration must be re-programmed in the AS interface master. Please read the operating instructions of the used AS interface master!

AS-i address factory setting:

AS-i address = 0

Programming data table:

	Programming data for 62 slaves **AS interface - Device for A/B slave addressing (default device)**	**Programming data for 31 slaves** **AS interface (optional)**
I/O configuration	7 hex (4 inputs / 4 outputs) see below: Bit configuration table	7 hex (4 inputs / 4 outputs) see below: Bit configuration table
ID code	A hex	F hex
Extended ID code 1	7 hex	(F hex)
Extended ID code 2	E hex	(F hex)
Profile	S-7. A.E	S-7. F.F

Bit configuration table:

Data bit	**D3**	**D2**	**D1**	**D0**
Input	External initiator S4	Position 3	Position 2	Position 1
Output	Not used	Solenoid valve 3	Solenoid valve 2	Solenoid valve 1
Parameter bit	**P3**	**P2**	**P1**	**P0**
Output	Not used	Not used	Not used	Not used

Compare also the bit configuration for the design “15.2. Control head (AS-i) with 2 external initiators” on page 74.

MAN 1000138479 EN Version: F Status: RL (released | freigegeben) printed: 10.05.2016

CSI 417.831.1411 csidesigns.com

12. DEVICENET - DESIGN

12.1. Definition

- The DeviceNet is a field bus system which is based on the CAN protocol (Controller Area Network). It enables actuators and sensors (slaves) to be networked with higher-level controllers (master).
- The control head in the DeviceNet is a slave device according to the Predefined Master/Slave Connection Set stipulated in the DeviceNet specification. Polled I/O, Bit Strobed I/O and Change of State (COS) are supported as I/O connection variants.
- With DeviceNet it is necessary to differentiate between cyclical or event-driven high-priority process messages (I/O Messages) and acyclical low-priority management messages (Explicit Messages).
- The protocol process conforms to the **DeviceNet specification Release April 2010.**

12.2. Electrical connection option

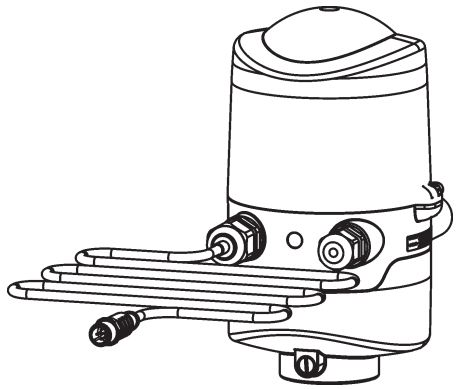	**Cable gland with multi-pole connection** (M12 plug according to IEC 61076-2-101, 5-pole) Connection left: Voltage, signals Connection right: external initiator

Fig. 23: Connection concept DeviceNet

12.3. DeviceNet specification

EDS file:	8681.EDS
Icons:	8681.ICO
Baud rate:	125 kBit/s, 250 kBit/s, 500 kBit/s (can be adjusted using DIP switches 7, 8); factory setting: 125 kBit/s (see Chapter “12.10.2. Setting the baud rate”)
Address:	0 ... 63 (via DIP switches 1 ... 6 adjustable); factory setting: 63 (see Chapter “12.10.1. Settings of the DeviceNet address”)
Process data:	2 static input assemblies (Input: from control head to DeviceNet master/scanner) 1 static output assembly

MAN 1000138479 EN Version: F Status: RL (released | freigegeben) printed: 10.05.2016

Inputs:	3 discrete feedback signals from the position measuring system (positions S1 - S3) 1 discrete feedback signal from the external initiator (S4) 1 analog position signal in mm supply via DeviceNet string (11 ... 25 V DC) Switch level high signal ≥ 5 V Switch level low signal ≤ 1.5 V
Outputs:	3 solenoid valves
Power consumption from the bus:	max. output 5 W, if all valves are switched (3 x type 6524 with 0.6 W each)

12.3.1. Total line length and maximum line length according to DeviceNet specification

The bus line is a 4-core cable with additional shielding which must conform to the DeviceNet specification. The cable transmits both information (data) and energy (power supply for low-power actuators and sensors).

The maximum total line length (sum of trunk lines and drop lines) of a network depends on the baud rate.

Baud rate	Maximum total line length*1	
	Thick Cable*2	**Thin Cable*2**
125 kbaud	500 m	100 m for all baud rates
250 kbaud	250 m	
500 kbaud	100 m	

*1 *According to DeviceNet specification. If a different cable type is used, lower maximum values apply.*
*2 *For cable designation and details - see DeviceNet specification.*

12.3.2. Drop line length

Baud rate	Length of the drop lines	
	Maximum length	**Maximum total length of all drop lines in the network**
125 kbaud	6 m for all baud rates	156 m
250 kbaud		78 m
500 kbaud		39 m

MAN 1000138479 EN Version: F Status: RL (released | freigegeben) printed: 10.05.2016

CSI 417.831.1411 csidesigns.com

12.4. Electrical data

Connections:

"Multi-pole":	1 x M16 x 1.5 cable gland / SW22 with multi-pole connection (M12 plug according to IEC 61076-2-101, 5-pole on a cable of 80 cm length) for DeviceNet bus and power supply
	1 x M16 x 1.5 cable gland/SW19 - connection option for external initiator (sealed with dummy plug, remove these before use)
Power supply:	11 … 25 V DC (according to specification)
Max. power consumption:	200 mA at 24 V DC

Input / proximity switches (external initiator: S4 in):

Power supply:	via DeviceNet power supply - 10%
Current carrying capacity sensor supply:	max. 30 mA
Short-circuit protection	
Design:	DC 2- and 3-wire, Normally open contact, PNP output
Input current 1 signal:	I_{Sensor} > 6.5 mA, limited internally to 10 mA
Input voltage 1 signal:	U_{Sensor} > 10 V
Input current 0 signal:	I_{Sensor} < 4 mA
Input voltage 0 signal:	U_{Sensor} < 5 V

Inputs (from master perspective) / binary or analog feedback signals:
The recovery of the 3 valve positions reported back in binary format or the analog position signal is described in Chapter “16” on page 75.

Outputs (from master perspective) / solenoid valves:

Max. switching capacity:	1.0 W (per solenoid valve)
Typ. continuous output:	0.6 W (per solenoid valve)
Output reduction:	via DeviceNet interface - electronics integrated
Pull-in current:	120 mA typ. / 200 ms (3 valves)
Holding current:	100 mA typ. at 24 V DC (3 valves)
Operating mode:	Long-term operation (100% ED)
Valve types:	6524

Central display of the switching states:

Power consumption from DeviceNet at 24 V DC:	42 mA with a power supply of 24 V DC per illuminated display; color switching see Chapter “17. LED Color Assignments” on page 81

12.5. Safety position if the bus fails

If the bus fails, the solenoid valve is switched to a programmable safety position (default: solenoid valve not energized). For configuration data see Chapter “12.12.1. Configuration of the safety position of solenoid valves during a bus error”.

MAN 1000138479 EN Version: F Status: RL (released | freigegeben) printed: 10.05.2016

12.6. Design aid

Power consumption of the electronics:								
P_{El}	=	1.44 W	or	I_{El}	=	60 mA	at	24 V
Power consumption of a valve during activation (200 ms):								
$P_{Valve\text{-}ON}$	=	1.0 W	or	$I_{Valve\text{-}ON}$	=	42 mA	at	24 V
Power consumption of a valve after reduction:								
P_{Valve}	=	0.6 W	or	I_{Valve}	=	25 mA	at	24 V
Power consumption of an optical position report:								
P_{LED}	=	1.0 W	or	I_{LED}	=	42 mA	at	24 V

Calculation examples:

Example 1: 3 valves are activated simultaneously, one position is reported (state for 200 ms):						
P_{Total}	=	P_{El}	+	3 x $P_{Valve\text{-}ON}$	+	1 x P_{LED}
5.44 W	=	1.44 W	+	3 x 1.0 W	+	1 x 1.0 W
or						
I_{Total}	=	I_{El}	+	3 x $I_{Valve\text{-}ON}$	+	1 x I_{LED}
228 mA	=	60 mA	+	3 x 42 mA	+	1 x 42 mA

Example 2: 3 valves have been activated simultaneously, one position is reported (persistent state):						
P_{Total}	=	P_{El}	+	3 x P_{Valve}	+	1 x P_{LED}
4.24 W	=	1.44 W	+	3 x 0.6 W	+	1 x 1.0 W
or						
I_{Total}	=	I_{El}	+	3 x I_{Valve}	+	1 x I_{LED}
177 mA	=	60 mA	+	3 x 25 mA	+	1 x 42 mA

When using an external initiator, its power requirement should be added.

MAN 1000138479 EN Version: F Status: RL (released | freigegeben) printed: 10.05.2016

CSI 417.831.1411 csidesigns.com

12.7. Safety instructions

DANGER!

Danger of explosion in explosive atmosphere (only in the event of a fault as zone 2)!

- Opening the hood or the housing in an explosive atmosphere is only allowed in a not energized state!

WARNING!

Risk of injury due to electric shock!

- Before reaching into the system (except for the Teach-In procedure in a non-explosive atmosphere) switch off the power supply and secure it to prevent restarting!
- Observe applicable accident prevention and safety regulations for electrical equipment!
- When setting the position measuring system (Teach-In), do not contact any live components!

Risk of injury from improper installation!

- Installation may be carried out by authorized technicians only and with the appropriate tools!

Risk of injury from unintentional activation of the system and uncontrolled restart!

- Secure system against unintentional activation.
- Following installation, ensure a controlled restart.

12.8. Electrical installation - DeviceNet

No internal cabling work is required for any of the DeviceNet designs (cable with multi-pole connection), which makes installation and start-up on site considerably easier and quicker, reducing the risk of leaks.
However, you will require the correspondingly assembled cable sets with the pin assignments described below:

Multi-pole connection DeviceNet

The control head features a 5-pole multi-pole circular plug (M12 x 1 circular plug, 5-pole, male) to a 80 cm long cable. The configuration conforms to the DeviceNet specification.

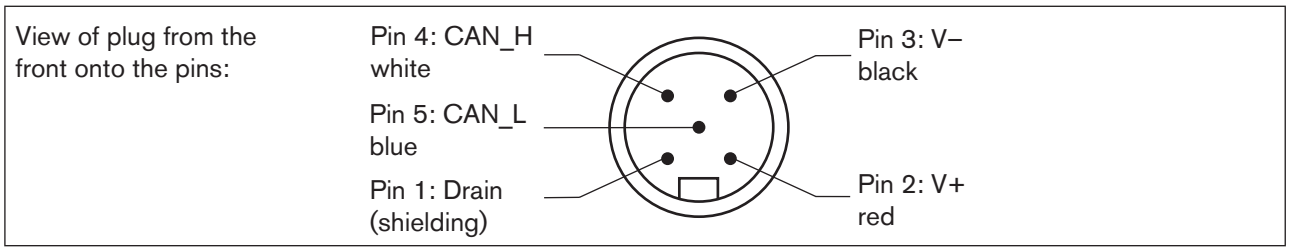

Fig. 24: Bus connection of DeviceNet with power supply

Pin	1	2	3	4	5
Signal	Shielding	V +	V –	CAN_H	CAN_L

MAN 1000138479 EN Version: F Status: RL (released | freigegeben) printed: 10.05.2016

DeviceNet electronics module:

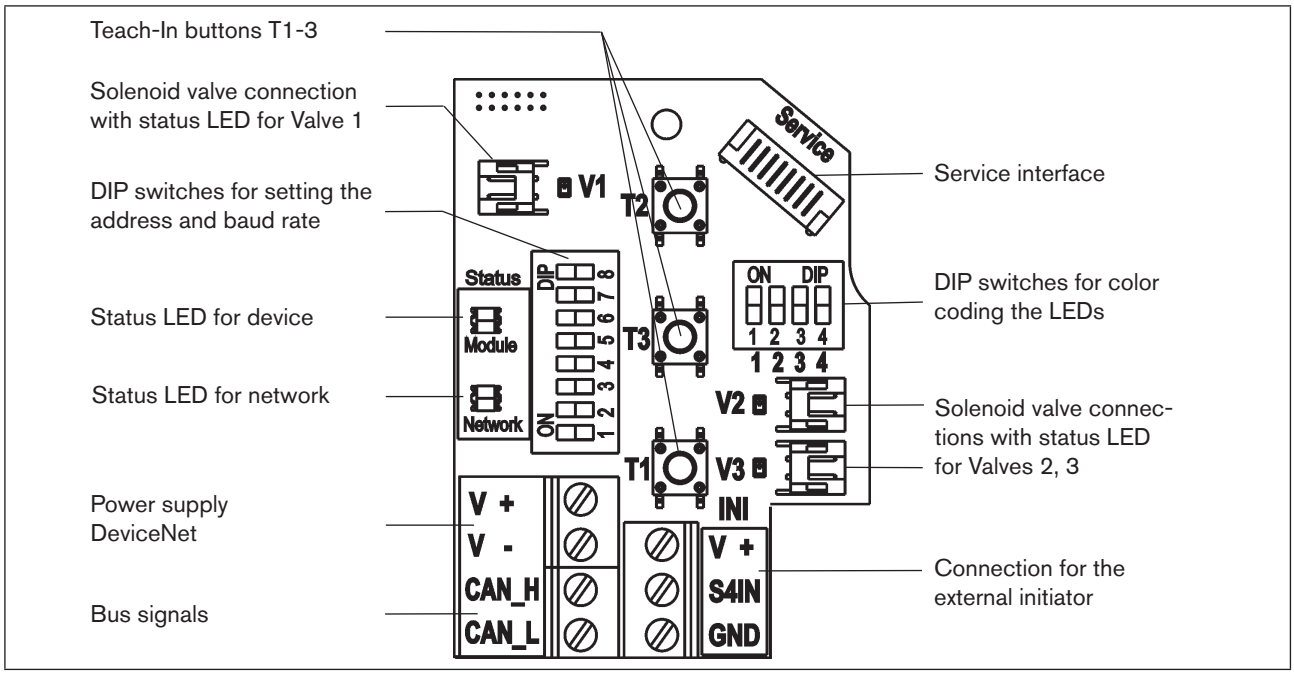

Fig. 25: DeviceNet electronics module

Terminal strip configuration:

Designation Terminal strip	Configuration
V+	Power supply DeviceNet
V-	Power supply DeviceNet
CAN_H	Bus signal CAN high
CAN_L	Bus signal CAN low

Designation Terminal strip	Configuration
V +	Power supply for external initiator
S4 IN	External initiator input
GND	GND external initiator

MAN 1000138479 EN Version: F Status: RL (released | freigegeben) printed: 10.05.2016

CSI 417.831.1411 csidesigns.com

12.9. Network topology of a DeviceNet system

When installing a DeviceNet system, ensure that the terminating circuit of the data lines is correct. The circuit prevents the occurrence of interference caused by signals reflected onto the data lines.

The trunk line must be terminated at both ends with resistors of 120 Ω and 1/4 W power loss (see "Fig. 26: Network topology").

"Fig. 26" illustrates a line with one trunk line and several drop lines. Trunk lines and drop lines consist of identical material.

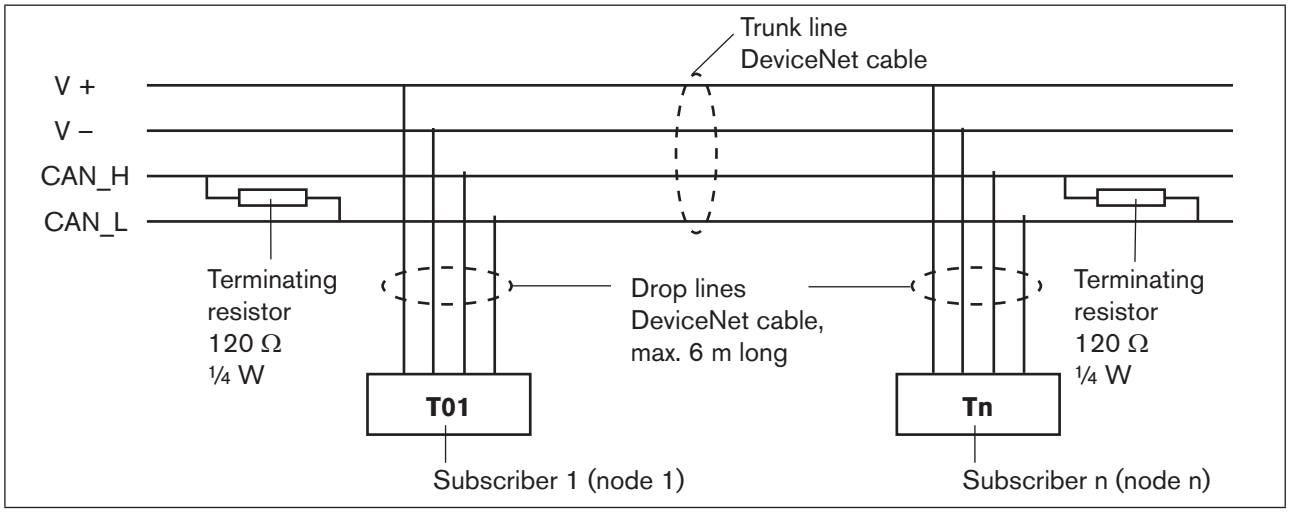

Fig. 26: Network topology

12.10. Configuring the DeviceNet address / baud rate

8 DIP switches are available for configuration:

- DIP switches 1 to 6 for the DeviceNet address
- DIP switches 7 to 8 for the baud rate

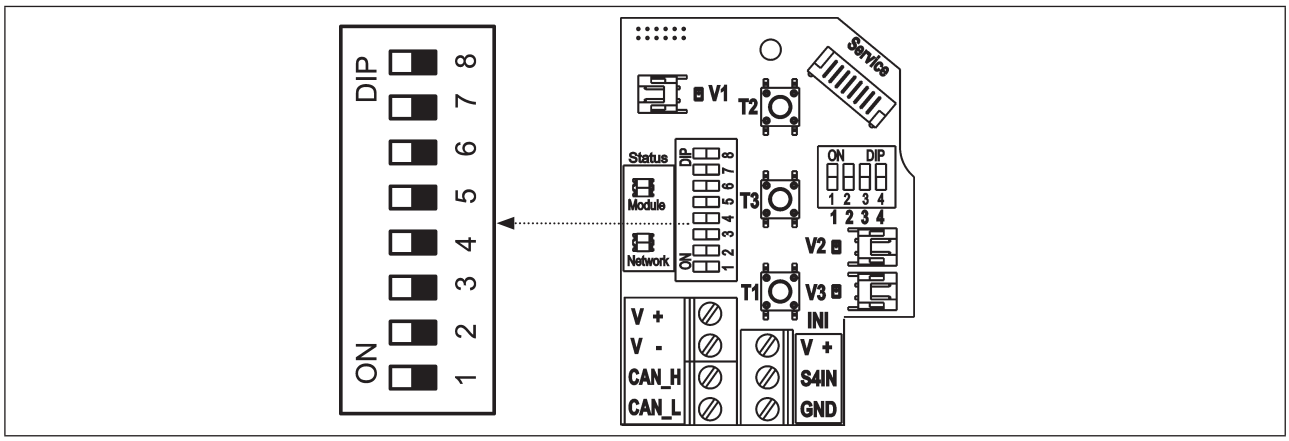

Fig. 27: Position of the DIP switches

MAN 1000138479 EN Version: F Status: RL (released | freigegeben) printed: 10.05.2016

12.10.1. Settings of the DeviceNet address

MAC ID address = Medium Access Control Identifier Address

MAC ID address = [DIP 1 · 2^0 + DIP 2 · 2^1 + DIP 3 · 2^2 + DIP 4 · 2^3 + DIP 5 · 2^4 + DIP 6 · 2^5]

with DIP x = off = 0 and DIP x = on =1

Table of the settings of the DeviceNet address:

MAC ID	DIP1	DIP2	DIP3	DIP4	DIP5	DIP6
0	off	off	off	off	off	off
1	on	off	off	off	off	off
2	off	on	off	off	off	off
3	on	on	off	off	off	off
4	off	off	on	off	off	off
5	on	off	on	off	off	off
6	off	on	on	off	off	off
7	on	on	on	off	off	off
8	off	off	off	on	off	off
9	on	off	off	on	off	off
10	off	on	off	on	off	off
11	on	on	off	on	off	off
12	off	off	on	on	off	off
13	on	off	on	on	off	off
14	off	on	on	on	off	off
15	on	on	on	on	off	off
16	off	off	off	off	on	off
17	on	off	off	off	on	off
18	off	on	off	off	on	off
19	on	on	off	off	on	off
20	off	off	on	off	on	off
21	on	off	on	off	on	off
22	off	on	on	off	on	off
23	on	on	on	off	on	off
24	off	off	off	on	on	off
25	on	off	off	on	on	off
26	off	on	off	on	on	off
27	on	on	off	on	on	off
28	off	off	on	on	on	off
29	on	off	on	on	on	off
30	off	on	on	on	on	off
31	on	on	on	on	on	off

MAC ID	DIP1	DIP2	DIP3	DIP4	DIP5	DIP6
32	off	off	off	off	off	on
33	on	off	off	off	off	on
34	off	on	off	off	off	on
35	on	on	off	off	off	on
36	off	off	on	off	off	on
37	on	off	on	off	off	on
38	off	on	on	off	off	on
39	on	on	on	off	off	on
40	off	off	off	on	off	on
41	on	off	off	on	off	on
42	off	on	off	on	off	on
43	on	on	off	on	off	on
44	off	off	on	on	off	on
45	on	off	on	on	off	on
46	off	on	on	on	off	on
47	on	on	on	on	off	on
48	off	off	off	off	on	on
49	on	off	off	off	on	on
50	off	on	off	off	on	on
51	on	on	off	off	on	on
52	off	off	on	off	on	on
53	on	off	on	off	on	on
54	off	on	on	off	on	on
55	on	on	on	off	on	on
56	off	off	off	on	on	on
57	on	off	off	on	on	on
58	off	on	off	on	on	on
59	on	on	off	on	on	on
60	off	off	on	on	on	on
61	on	off	on	on	on	on
62	off	on	on	on	on	on
63	on	on	on	on	on	on

MAN 1000138479 EN Version: F Status: RL (released | freigegeben) printed: 10.05.2016

CSI 417.831.1411 csidesigns.com

12.10.2. Setting the baud rate

Adjustment of the control head to the baud rate of the network.

Baud rate	DIP 7	DIP 8
125 kbaud	off	off
250 kbaud	on	off
500 kbaud	off	on
not permitted:	(on)	(on)

If the settings are changed by actuating the DIP switches, this change will not take effect until the device is restarted!
For a restart

- briefly disconnect the control head from the power supply and reconnect or
- switch the power supply off/on or
- transmit an appropriate reset message.

12.11. Configuration of the process data

To **transmit process data** via an I/O connection, 2 static input and 1 static output assembly can be selected. These assemblies contain selected attributes combined into one object so that process data can be transmitted collectively via an I/O connection.

The **process data** is selected by setting the device parameters Active Input Assembly and Active Output Assembly or - if supported by the DeviceNet-Master/Scanner - by setting Produced Connection Path and Consumed Connection Path when an I/O connection is initialized according to the DeviceNet specification.

12.11.1. Static input assemblies

Name	Address of data attribute of the assemblies for read access. Class, instance, attributes	Format of the data attribute Value 0: OFF, Value 1: ON
S1…S4 (factory setting)	4, 1, 3	**Byte 0:** Bit 0: Position S1 Bit 1: Position S2 Bit 2: Position S3 Bit 3: Position S4
S1…S4 + POS (with POS: Actual position	4, 2, 3	**Byte 0:** Bit 0: Position S1 Bit 1: Position S2 Bit 2: Position S3 Bit 3: Position S4 Bit 4…7: not used **Byte 1:** POS in mm

MAN 1000138479 EN Version: F Status: RL (released | freigegeben) printed: 10.05.2016

The addresses listed in the table above ("Static input assemblies") can be used as path data for the Produced Connection Path attribute of an I/O connection.

Nevertheless, by using this address data, the attributes combined in the assemblies can also be accessed acyclically via Explicit Messages.

12.11.2. Static output assembly

Name	Address of data attribute of the assemblies for read access. Class, instance, attributes	Format of the data attribute Value 0: OFF, Value 1: ON
Solenoid valves 1…3	4, 21, 3	**Byte 0:** Bit 0: SV1 Bit 1: MV2 Bit 2: MV3 Bit 3…7: not used

The address listed in the table above ("Static input assembly") can be used as path data for the Produced Connection Path attribute of an I/O connection.

Nevertheless, by using this address data, the attributes combined in the assemblies can also be accessed acyclically via Explicit Messages.

12.12. Configuration of the device

12.12.1. Configuration of the safety position of solenoid valves during a bus error

The valve safety position and safety module attributes can be used to configure the solenoid valves in the event of a bus error.

If a bus error occurs, the configuration data of the solenoid valves can be accessed acyclically via Explicit Messages.

- The *Get_Attribute_Single* service stands for a **read access** of the configuration data.
- The *Set_Attribute_Single* service stands for a **write access** of the configuration data.

1 data byte for **safety mode**:
(attribute address:
class 150, instance 1, attributes 7)

Bit	Mode	Value assignment
Bit 0	Characteristics in event of bus error	0 Approach safety position 1 Retain last valve position
Bits 1...7	not used	0 (always)

1 data byte for **valve safety position**:
(attribute address:
class 150, instance 1, attributes 6)

Bit	Solenoid valve	Value assignment
Bit 0	Y1 (solenoid valve 1)	Value 0: OFF / value 1: ON
Bit 1	Y2 (solenoid valve 2)	Value 0: OFF / value 1: ON
Bit 2	Y3 (solenoid valve 3)	Value 0: OFF / value 1: ON
Bits 3...7	not used	0 (always)

MAN 1000138479 EN Version: F Status: RL (released | freigegeben) printed: 10.05.2016

CSI 417.831.1411 csidesigns.com

12.12.2. Configuration example

The example describes the principle procedure when configuring the device using the RSNetWorx software for DeviceNet (Rev. 4.21.00).

Installation of the EDS File

The EDS file is installed with the aid of the EDS Installation Wizard Tool associated with RSNetWorx.

During the installation procedure the icon can be assigned (if this does not occur automatically).

Offline parameterization of the device

When a device has been inserted into the DeviceNet configuration of RSNetWorx, the device can be parameterized offline.

"Fig. 28" indicates how, for example, an input assembly which deviates from the factory setting (input process data can be transferred via I/O connection) can be selected. However, ensure that the length of the process data during a subsequent configuration of the DeviceNet master/scanner is adjusted accordingly.

All parameter changes implemented offline must become operative for the real device at a later date by a download process.

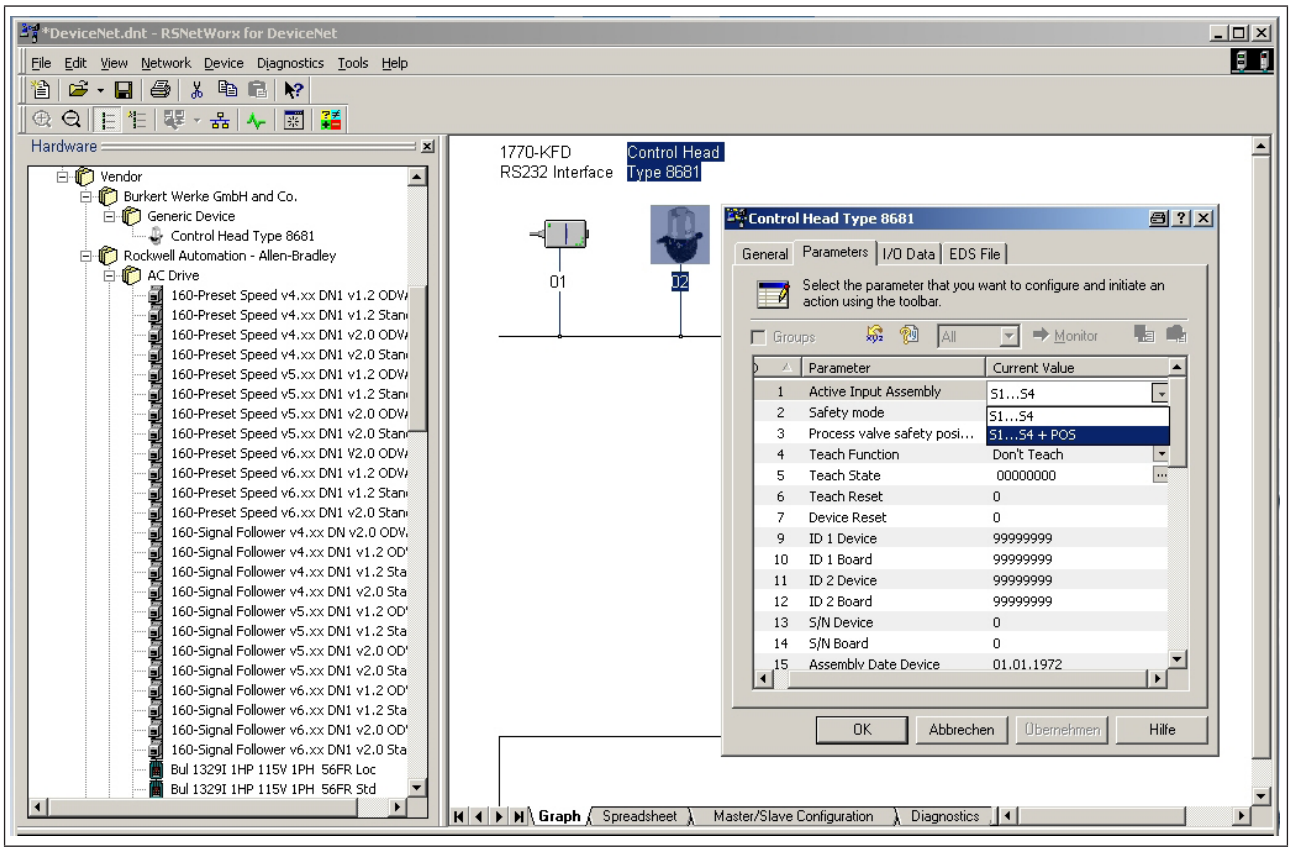

Fig. 28: Selecting the input assembly (screenshot)

MAN 1000138479 EN Version: F Status: RL (released | freigegeben) printed: 10.05.2016

Online parameterization of the device

Devices can also be parameterized online. In doing so, you can also select whether only individual parameters (single) or all parameters (all) of a group are read from the device (upload) or are loaded into the device (download).

It is also possible to transfer individual parameters or all parameters of a group cyclically in monitor mode. This may be helpful particularly for start-up purposes.

12.13. Display of the status LEDs in the event of a bus error

Bus errors are also indicated on the central three-colored status display - see Chapter “17.2. Blinking pattern & fault signaling”.

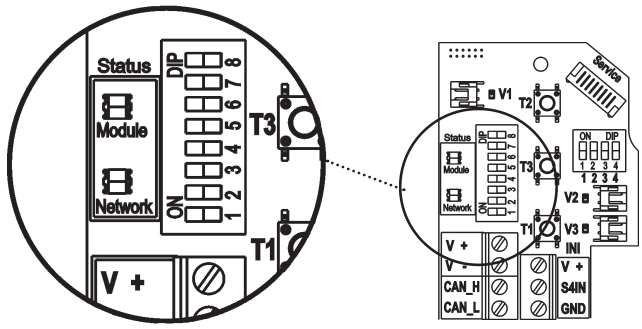

The device status LED ("modules") and the bus status LED ("network") are located on the electronics module.

Fig. 29: Status LEDs

Function tests for both status LEDs after power has been switched on (connection of the network cable):

Status LED	Colors of the LED	Function test
"Modules"	green	▪ 250 ms ON (green)
"Network"	green / red	▪ 250 ms ON (green) ▪ 250 ms ON (red)

Then another function test is run during which the LEDs light up briefly.

When the test is complete, the status LEDs indicate the device states which are described in the following tables.

12.13.1. Status of the device status LED "Modules"

LED	Device state	Explanation
Off	No supply	▪ Device is not supplied with voltage
Green	Device is working	▪ Normal operating state

MAN 1000138479 EN Version: F Status: RL (released | freigegeben) printed: 10.05.2016

12.13.2. State of bus status LED "Network"

LED	Device state	Explanation	Troubleshooting
Off	No voltage / not online	▪ Device is not supplied with voltage ▪ Device has still not ended Duplicate MAC ID Test (test lasts approx. 2 s) ▪ Device cannot end Duplicate MAC ID Test.	▪ Connect other devices, if the device is the only network subscriber, ▪ replace device ▪ check baud rate ▪ check bus connection
Green	Online, connection to master exists	▪ Normal operating state with established connection to the master	
Flashes green	Online, without connection to master	▪ Normal operating state without established connection to the master	
Flashes red	Connection time-out	▪ One or more I/O connections are in Time-Out state	▪ New connection establishment by master to ensure that the I/O data is transmitted cyclically.
Red	Critical fault	▪ Another device with the same MAC ID address is in the circuit ▪ No bus connection due to communication problems	▪ Check baud rate ▪ Please check address as possible troubleshooting ▪ If required, replace device

MAN 1000138479 EN Version: F Status: RL (released | freigegeben) printed: 10.05.2016

13. 120 V AC - DESIGN

13.1. Electrical connection options

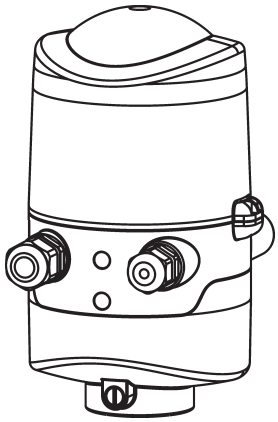	**Cable gland:** Connection left: Voltage, signals Connection right: external initiator

Fig. 30: Connection concept 120 V AC

13.2. Electrical data

Central power supply: 110 ... 130 V AC, 50/60 Hz

Connections: Cable gland

1 x M16 x 1.5 cable gland/SW22 - for power supply and signals (only for transportation safety devices sealed with dummy plugs, remove these before use!)
for cable diameter 5 ... 10 mm,
for wire cross-sections 0.5 ... 1.5 mm^2,
including PE connection terminal
(tightening torque of the clamping screws max. 0.5 Nm)

1 x M16 x 1.5 cable gland/SW19 - connection option for external initiator (sealed with dummy plug, remove these before use)

Power consumption (standby current): 10 mA at 120 V AC

Solenoid valves:

Max. switching capacity:	1.7 VA (per solenoid valve)
Typ. continuous output:	1.4 VA (per solenoid valve)
Power consumption per solenoid valve:	12 mA at 120 V AC
Operating mode:	Long-term operation (100% ED)

Central display of the switching states: 13 mA with a power supply of 120 V AC per illuminated display; color switching see Chapter “17. LED Color Assignments”

Outputs/binary feedback signals: S1out - S3out

Design:	Normally open contact, L switching, short-circuit protection via automatically resetting fuse
Switchable output current:	max. 50 mA per feedback signal
Output voltage - active:	≥ (operating voltage - 2 V)
Output voltage - inactive:	max. 1 V in unloaded state

MAN 1000138479 EN Version: F Status: RL (released | freigegeben) printed: 10.05.2016

Feedback signal output: S4 out is directly connected to S4in

Input / proximity switches (external initiator: S4 in):

Power supply:	voltage present at control head $U_{Nominal}$ = 120 V AC, 50/60 Hz
Design:	DC 2 and 3-wire, Normally open contact, L-switching
Input current 1-signal:	I_{Sensor} < 2 mA

Inputs valve actuation (Y1 - Y3):

Signal level - active:	U > 60 V AC
Signal level - inactive:	U < 20 V AC
Impedance:	> 40 kOhm

13.3. Design aid

Power consumption of the electronics:								
P_{El}	=	1.2 VA	or	I_{El}	=	10 mA	at	120 VA
Power consumption of a valve during activation (200 ms):								
$P_{Valve-ON}$	=	1.7 VA	or	$I_{Valve-ON}$	=	14 mA	at	120 VA
Power consumption of a valve after reduction:								
P_{Valve}	=	1.4 VA	or	I_{Valve}	=	12 mA	at	120 VA
Power consumption of an optical position report:								
P_{LED}	=	1.6 VA	or	I_{LED}	=	13 mA	at	120 VA

Also, if several control head valves were to be opened simultaneously, the switch signal will be sent staggered to the valves. Only *one* valve 1.7 VA will ever be recorded.

Calculation examples:

Example 1:
3 valves are activated simultaneously, one position is reported (state for 200 ms):

P_{Total}	=	P_{El}	+	1 x $P_{Valve-ON}$	+	2 x P_{Valve}	+	1 x P_{LED}
7.3 VA	=	1.2 VA	+	1 x 1.7 VA	+	2 x 1.4 VA	+	1 x 1.6 VA
or								
I_{Total}	=	I_{El}	+	1 x $I_{Valve-ON}$	+	2 x I_{Valve}	+	1 x I_{LED}
61 mA	=	10 mA	+	1 x 14 mA	+	2 x 12 mA	+	1 x 13 mA

MAN 1000138479 EN Version: F Status: RL (released | freigegeben) printed: 10.05.2016

Example 2: 3 valves have been activated simultaneously, one position is reported (persistent state):							
P_{Total}	=	P_{El}	+	3 x P_{Valve}	+	1 x P_{LED}
7.0 VA	=	1.2 VA	+	3 x 1.4 VA	+	1 x 1.6 VA
or						
I_{Total}	=	I_{El}	+	3 x I_{Valve}	+	1 x I_{LED}
59 mA	=	10 mA	+	3 x 12 mA	+	1 x 13 mA

When using an external initiator, its power requirement should be added.

13.4. Safety instructions

DANGER!

Risk of injury due to electric shock (110 ... 130 V AC)!

- Before reaching into the system (except for the Teach-In procedure in a non-explosive atmosphere) switch off the power supply and secure it to prevent restarting!
- Observe applicable accident prevention and safety regulations for electrical equipment!
- When setting the position measuring system (Teach-In), do not contact any live components!

Risk of electric shock if the PE connection is not connected!

- the PE connection must be connected!

Danger of explosion in explosive atmosphere (only in the event of a fault as zone 2)!

- Opening the hood or the housing in an explosive atmosphere is only allowed in a not energized state!

WARNING!

Risk of injury from improper installation!

- Installation may be carried out by authorized technicians only and with the appropriate tools!

Risk of injury from unintentional activation of the system and uncontrolled restart!

- Secure system against unintentional activation.
- Following installation, ensure a controlled restart.

MAN 1000138479 EN Version: F Status: RL (released | freigegeben) printed: 10.05.2016

CSI 417.831.1411 csidesigns.com

13.5. Electrical installation / start-up

DANGER!

Risk of injury due to electric shock (110 ... 130 V AC)!

- Before reaching into the system (except for the Teach-In procedure in a non-explosive atmosphere) switch off the power supply and secure it to prevent restarting!
- Observe applicable accident prevention and safety regulations for electrical equipment!
- When setting the position measuring system (Teach-In), do not contact any live components!

Procedure:

→ Open the housing following the instructions in Chapter "8. Opening and Closing the Housing".

→ Assemble connection cables for signals and power supply as well as for the external initiator where necessary in observance of the rules of technology.

→ Insert cables through the respective cable glands into the interior of the housing.

→ Connect the wires to the connection terminals according to the connection configuration described in "Fig. 31: 120 V AC electronics module". If required, secure the cable with a cable clip.

DANGER!

Risk of electric shock if the PE connection is not connected!

- the PE connection must be connected!

→ Clamp the protective conductor to the PE connection.

→ Check correct grounding.

→ Close the housing following the instructions in Chapter "8. Opening and Closing the Housing".

NOTE!

Ensure IP protection!

- To ensure IP protection, the union nuts of the cable glands must be tightened in accordance with the cable sizes or dummy plugs used (approx. 1.5 Nm).
- If no external initiator is used, the right-hand connection opening must be tightly sealed using a dummy plug or using a cable gland (SW 19, Ø 3 - 6 mm) with a dummy plug (Ø 5 - 6 mm)!

NOTE!

Use of the control head in explosive atmosphere

- Only use cables and cable glands which are approved for the respective application area and fit the cable glands according to the respective operating instructions!
- Close all unnecessary openings with lock screws/plugs approved for explosions area!

MAN 1000138479 EN Version: F Status: RL (released | freigegeben) printed: 10.05.2016

120 V AC Electronics module, terminal strip configuration:

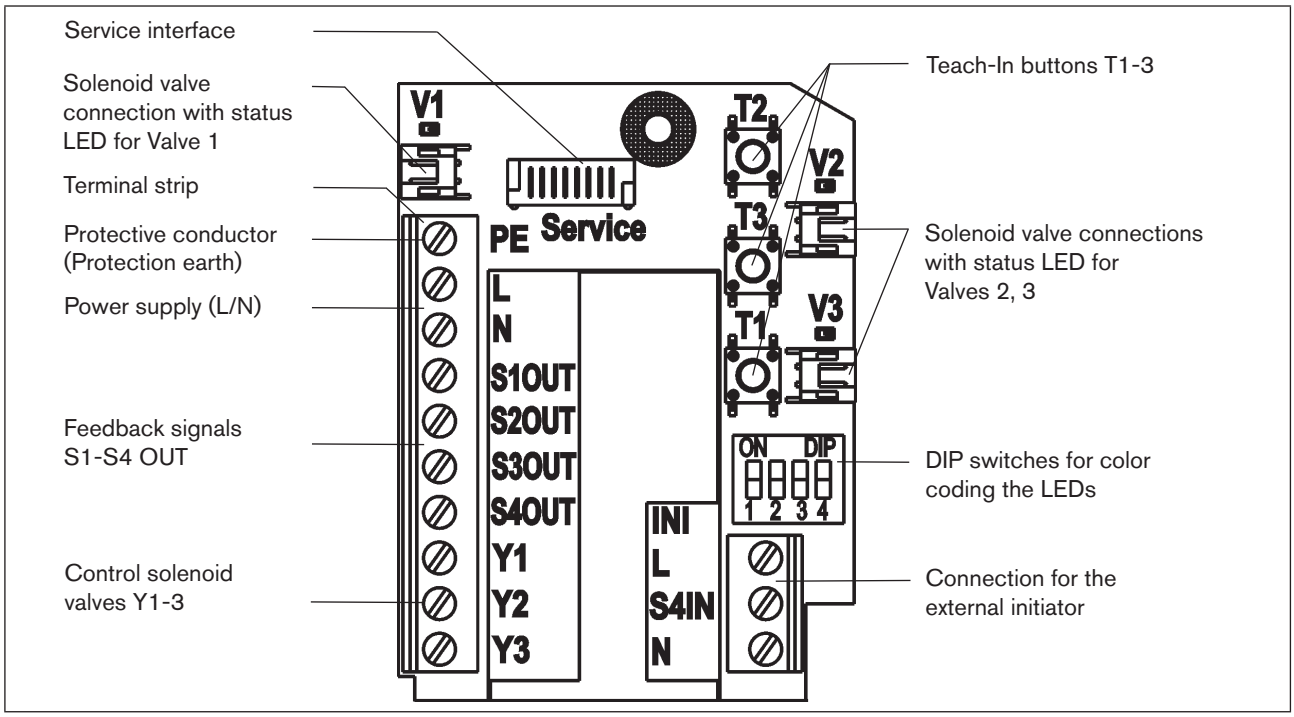

Fig. 31: 120 V AC electronics module

Designation Terminal strip	Configuration	
PE	Protection earth protective conductor	
L	Conductor	Power
N	Neutral conductor	supply 120 V AC
S1 OUT	Output position 1	
S2 OUT	Output position 2	
S3 OUT	Output position 3	
S4 OUT	External initiator output	
Y1	Solenoid valve 1 input	
Y2	Solenoid valve 2 input	
Y3	Solenoid valve 3 input	

Designation Terminal strip	Configuration for external initiator
L	Power supply - conductor
S4 IN	External initiator input
N	Power supply - neutral conductor

MAN 1000138479 EN Version: F Status: RL (released | freigegeben) printed: 10.05.2016

CSI 417.831.1411 csidesigns.com

Circuit diagram 120 V AC:

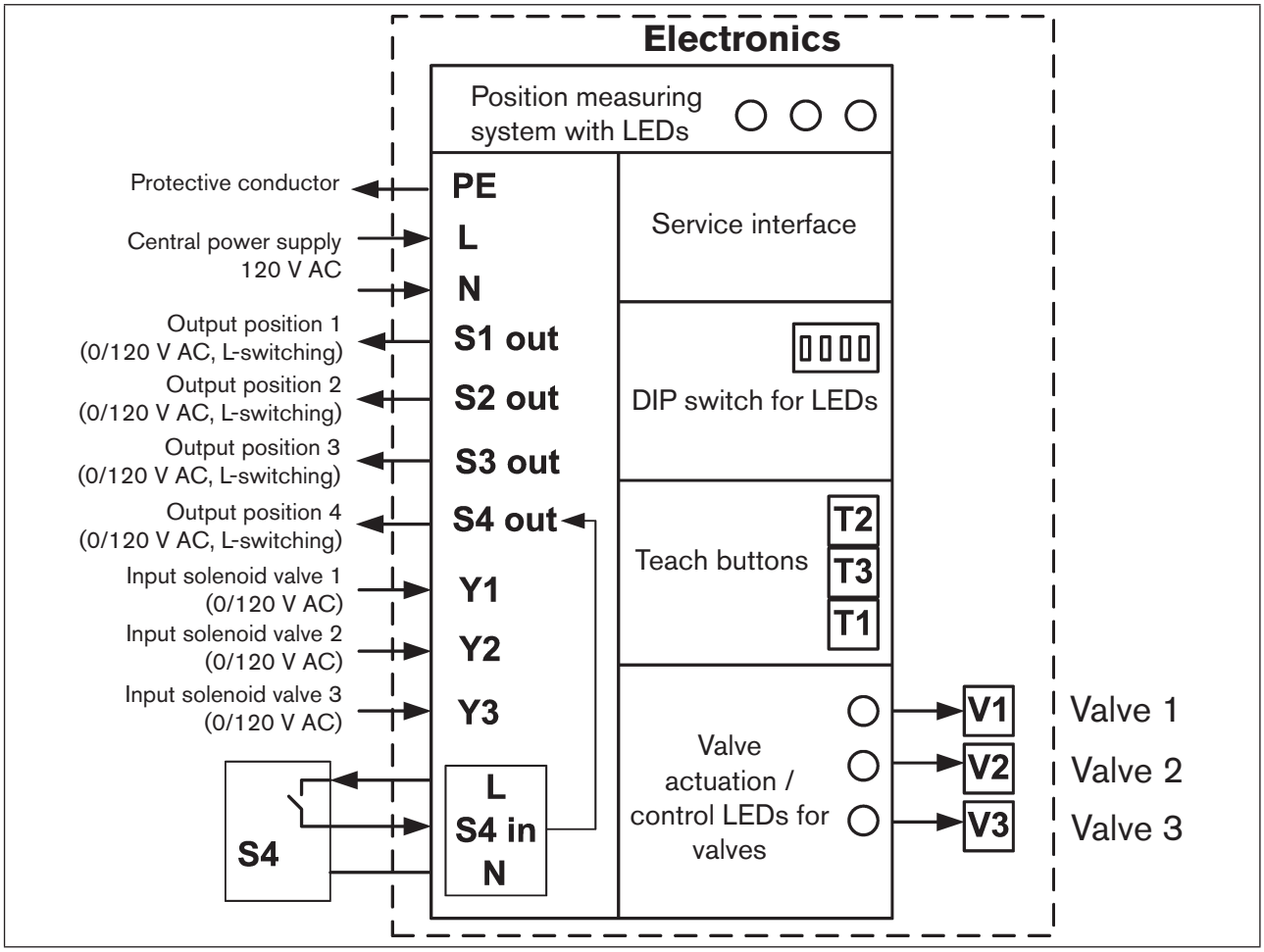

Fig. 32: Circuit diagram 120 V AC

MAN 1000138479 EN Version: F Status: RL (released | freigegeben) printed: 10.05.2016

14. CONNECTION OF AN EXTERNAL INITIATOR

DANGER!

Danger of explosion in explosive atmosphere (only in the event of a fault as zone 2)!

- Opening the hood or the housing in an explosive atmosphere is only allowed in a not energized state!

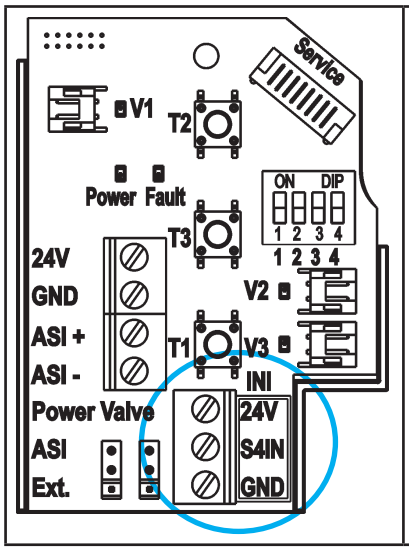

An external initiator can be connected via the 3-fold screw terminal - at bottom right on the respective electronics module (in the example: AS-i).

Due to the size of the screw terminals, the wire cross-sections of the external initiator have the following values for the different designs:
0.14 ... 1.5 mm² for design: 24 V, AS-i, DeviceNet;
0.5 ... 1.5 mm² for design: 120 V

Fig. 33: Screw terminal for external initiator

Designation of the screw terminals on the different electronics modules:

Designation - according to design			Configuration
24 V DC, AS-i	**DevNet**	**120 V AC**	
24 V	V+	L	Power supply - according to design!
S4 IN	S4 IN	S4 IN	External initiator input
GND	GND	N	GND external initiator (24 V DC, AS-i, DevNet) or power supply (120 V AC design)

Electrical requirements of the external initiator for different designs:

The electrical requirements of the external initiator can be found in the respective subchapters "Electrical data" under the headword "Input / proximity switch (external initiator: S4 in)":
Design 24 V: see Page 36, DeviceNet design: see Page 54,
AS-i design: see Page 45, 120 V design: see Page 65.

Procedure when connecting the external initiator:

→ Open the housing following the instructions in Chapter “8. Opening and Closing the Housing”.

→ Assemble the connection cables according to the general rules of technology.

→ Insert cables through the cable gland (connection on right) into the interior of the housing.

→ Connect the wires to the connection terminals according to the pin assignment.

→ Close the housing following the instructions in Chapter “8. Opening and Closing the Housing”.

CSI 417.831.1411 csidesigns.com

MAN 1000138479 EN Version: F Status: RL (released | freigegeben) printed: 10.05.2016

NOTE!

Ensure IP protection!

- To ensure IP protection, the union nuts of the cable glands must be tightened in accordance with the cable sizes or dummy plugs used (approx. 1.5 Nm).
- If no external initiator is used, the right-hand connection opening must be tightly sealed using a dummy plug or using a cable gland (SW 19, Ø 3 - 6 mm) with a dummy plug (Ø 5 - 6 mm)!

Use of the control head in explosive atmosphere

- Only use cables and cable glands which are approved for the respective application area and fit the cable glands according to the respective operating instructions!
- Close all unnecessary openings with lock screws/plugs approved for explosions area!

Connecting a 2-wire initiator:

24 V DC, AS-i	DevNet	120 V AC
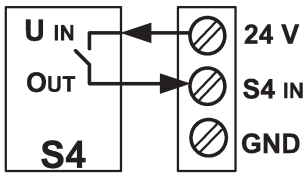	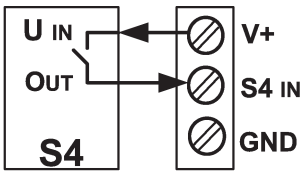	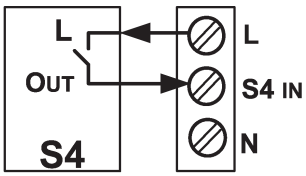

Connecting a 3-wire initiator:

24 V DC, AS-i	DevNet	120 V AC
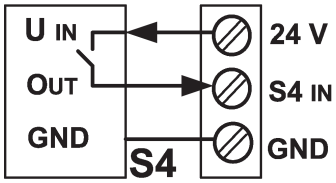	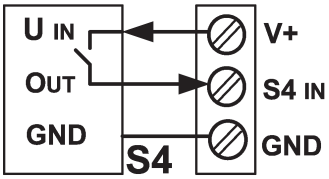	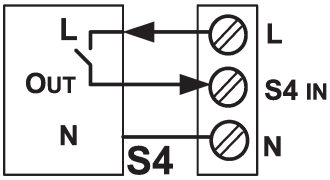

MAN 1000138479 EN Version: F Status: RL (released | freigegeben) printed: 10.05.2016

15. SPECIAL DESIGNS

15.1. Control head for double-acting actuators

This design is configured for double-acting actuators. Of the two internal solenoid valves, one is designed for NC mode of operation and the other for NO mode of operation.

15.1.1. Anomalies

This design can be configured for all electrical designs.

This control head differs from control head Type 8681 (standard) in the following points:

- Solenoid valve 1: NC / Normally Closed;
  Solenoid valve 2: NO / Normally Open (as a result safety position)
- The flow rate from P to A2 may be restricted to 50 l/min only, otherwise a reliable switchover (from A2 to R) cannot be guaranteed!
- only Autotune function 1 and 2 possible

15.1.2. Fluid diagram

See “Fig. 3: Fluid diagram (design for double-acting actuators: 2 solenoid valves, NC* + NO**)” on page 16.

15.1.3. Activation of a double-acting actuator

To open or close the process valve, both solenoid valves (V1 and V2) must be activated simultaneously:

Process valve	24 V / 120 V		AS interface		DeviceNet	
Solenoid valve (V)	V1	V2	V1	V2	V1	V2
Open	Y1 = ON	Y2 = ON	D0 = 1	D1 = 1	Bit0 = 1	Bit1 = 1
Close	Y1 = OFF	Y2 = OFF	D0 = 0	D1 = 0	Bit0 = 0	Bit1 = 0

For further information on the electrical installation and programming, see the relevant chapters for the individual standard designs:

24 V - design: “10. 24 V DC - Design” on page 36,
AS-i - design: “11. AS Interface - Design” on page 43,
DVN - design: “12. DeviceNet - Design” on page 52,
120 V - design: “13. 120 V AC - Design” on page 65.

MAN 1000138479 EN Version: F Status: RL (released | freigegeben) printed: 10.05.2016

CSI 417.831.1411 csidesigns.com

15.2. Control head (AS-i) with 2 external initiators

15.2.1. Anomalies

This design was configured for the AS interface design.

This control head differs from control head Type 8681 (standard, AS-i) in the following points:

- Connections for 2 external initiators, which behave like S1 and S2 (LED display)
- No internal positions can be taught
- No Autotune function can be used

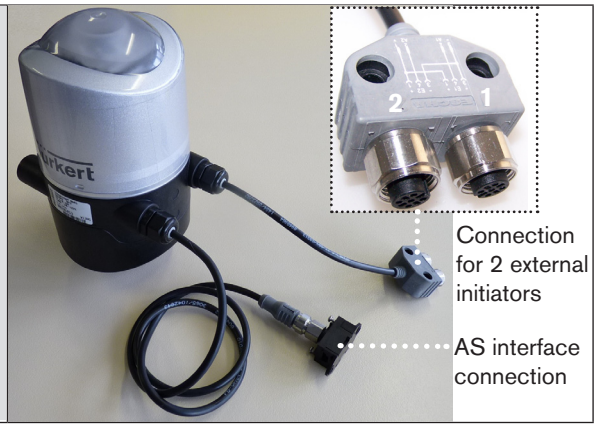

15.2.2. Electrical installation and programming data

Compare also Chapter "11.7. Electrical installation of the AS interface" on page 49 for the standard designs:

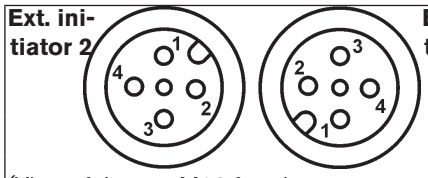

(View of the two M12 female connectors for the two external initiators)

Pin	External initiator 2	Wire color	Pin	External initiator 1	Wire color
1	24 V +	brown	1	24 V +	brown
2	Not used	-	2	Not used	-
3	GND	blue	3	GND	blue
4	S5 IN	white	4	S4 IN	black

Compare also Chapter "11.8. Programming data" on page 51 for the standard designs:

Bit configuration table:

Data bit	D3	D2	D1	D0
Input	Not used	Not used	External initiator 2 (S5 IN)	External initiator 1 (S4 IN)
Output	Not used	Solenoid valve **3**	Solenoid valve **2**	Solenoid valve **1**

MAN 1000138479 EN Version: F Status: RL (released | freigegeben) printed: 10.05.2016

16. POSITION MEASURING SYSTEM

Operating principle of the position measuring system

The position measurement is based on recording the change in position of the ferromagnetic target inside the system. The geometry and the material of the target to be used are synchronized with the sensitivity of the system. The measurement precision is determined by the ferromagnetic properties of the target and all other parts in the system. Ideally materials are used which do not have any ferromagnetic properties.

The switching positions of the process valves are reported to the actuator by feedback signals from the solderless position measuring system. Connection to the control head is done by means of a simple adaptation to the process valve's piston.

Stroke range / feedback signals / teach-in function

The recordable stroke range is between 0 ... 80 mm.

3 discrete feedback signal are evaluated:

- Position 1 (discrete S1OUT signal)
- Position 2 (discrete S2OUT signal)
- Position 3 (discrete S3OUT signal)

3 Teach-In buttons have been provided for comparison with the actual stroke range (see Chapter "16.1. Setting the position measuring system (Teach-In)"). The switching positions for the position measuring system can be determined with these Teach-In buttons or by means of the PC service program (connection via the Service interface on the electronics module).

A discrete, external feedback signal (standard proximity switch) can also be processed (S4IN, S4OUT).

If an explosive atmosphere is present the housing may not be opened when voltage is present.

For a detailed description of the **electrical installation** - see
Chapter "10. 24 V DC - Design" or
Chapter "11. AS Interface - Design" or
Chapter "12. DeviceNet - Design" or
Chapter "13. 120 V AC - Design" or
Chapter "15.2. Control head (AS-i) with 2 external initiators".

MAN 1000138479 EN Version: F Status: RL (released | freigegeben) printed: 10.05.2016

CSI 417.831.1411 csidesigns.com

16.1. Setting the position measuring system (Teach-In)

DANGER!

Danger of explosion in explosive atmosphere (only in the event of a fault as zone 2)!

- Opening the hood or the housing in an explosive atmosphere is only allowed in a not energized state!

Example procedure (for 3 valve positions):

→ Open the housing following the instructions in Chapter "8. Opening and Closing the Housing".

→ Supply electrical power so that the position measuring system and the LED display can function.

→ Position the process valve at the lower switching position.

→ Depress the lower Teach-In button (T1) for approx. 1.5 seconds:
The LED corresponding to this position will flash quickly 3 times during the teaching phase.
When this position has been saved, the corresponding LED will remain continuously lit until the position of the piston is changed.

→ Afterwards, position the process valve at the upper switching position to be recorded.

→ Depress the upper Teach-In button (T2) for approx. 1.5 seconds:
The LED corresponding to this position will flash quickly 3 times during the teaching phase.
When this position has been saved, the corresponding LED will remain continuously lit until the position of the piston is changed.

→ The process valve can now be moved into a third, defined position.

→ Depress the middle Teach-In button (T3) for approx. 1.5 seconds:
The LED corresponding to this position will flash quickly 3 times during the teaching phase.
When this position has been saved, the corresponding LED will flash continuously until the position of the piston is changed.

→ If required, return control head and system to normal state (switching position, power supply).

→ Close the housing following the instructions in Chapter "8. Opening and Closing the Housing".

If the piston or the target are located outside the measuring area during the teaching phase, LED 3 will flash in the defined fault color.

If the piston or target are outside of the measuring area, no positions signals will report back, i.e. no LEDs will be lit.

The Teach-In buttons can be assigned to any of the positions of the piston, i.e. T1 does not have to correspond to the lower piston position, etc.

MAN 1000138479 EN Version: F Status: RL (released | freigegeben) printed: 10.05.2016

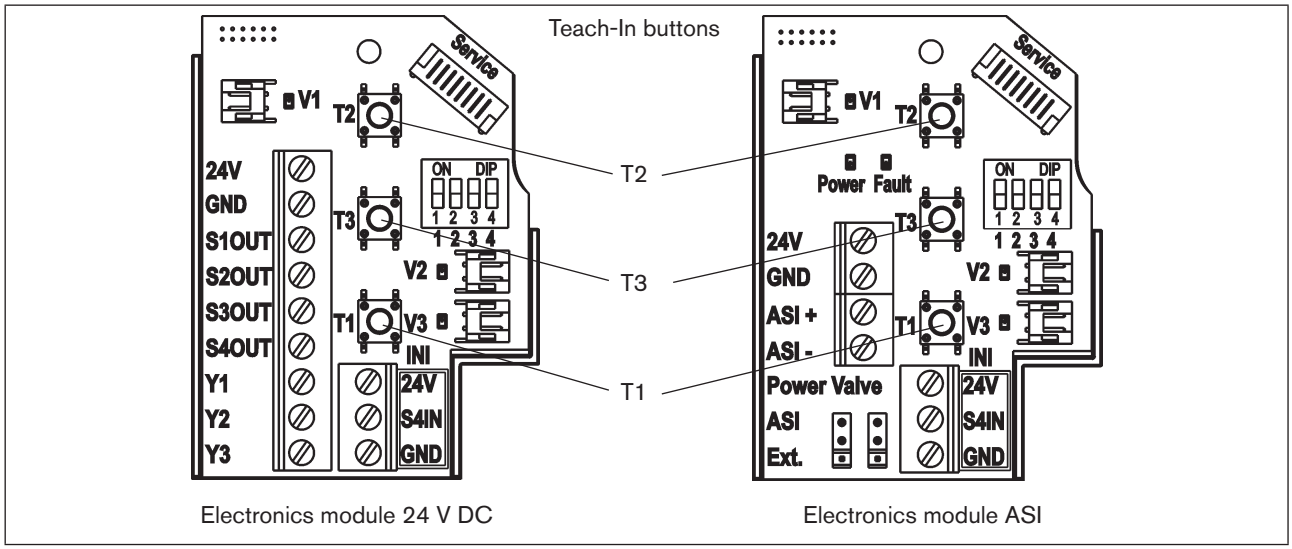

Fig. 34: Teach-In buttons on the electronics modules (in the example of the electronics modules for 24 V DC and AS-i)

16.2. Teach button functions

16.2.1. Teach functions and Teach reset

Teach button	Function	Activation duration	Optical feedback
T1	Teach function S1	1.5 s	S1 blinks quickly three times, then continuously in the encoded color
T2	Teach function S2	1.5 s	S2 blinks quickly three times, then continuously in the encoded color
T3	Teach function S3	1.5 s	S3 blinks quickly three times, then slowly in the encoded color
T1 + T2	Teach-In reset S1, S2, and S3	2.5 s	Blinks in the fault color

Difference between the different "blinking patterns" - see Chapter “17.2. Blinking pattern & fault signaling”.

MAN 1000138479 EN Version: F Status: RL (released | freigegeben) printed: 10.05.2016

CSI 417.831.1411 csidesigns.com

16.2.2. Autotune functions

Teach button	Mode	Activation duration	Opt. feedback
T2 + T3	Autotune mode	2.5s	green + yellow + red Continuously ON

+

Teach button	Function	Activation duration	Opt. feedback
T1	Autotune 1	0.5s	green + yellow + red chaser mode
T2	Autotune 2		
T3	Autotune 3		
T1 + T2	Autotune 4		
T1 + T3	Autotune 5		
T2 + T3	Autotune 6		

The Autotune function can be selected after changing to Autotune mode. If an Autotune function has not been started 10 seconds after the change to Autotune mode, that mode will be exited.

If an Autotune function does not run properly or is aborted (if e.g. no compressed air is connected), the positions already taught are deleted again, the corresponding Autotune function is left and switched to normal operation. The Teach positions are set to "not taught", i.e. they flash in the fault color.

In the case of the design for double-acting actuators (solenoid valves NC+NO) only Autotune functions 1 and 2 are possible (compare Chapter “15.1” on page 73).

16.2.3. Autotune sequence

Autotune 1:

Control	Effect on the process valve	Internal program		Error
T2 + T3	**Autotune mode started**			
T1	Autotune 1 starts			
	Closed position	Teach	T1	
	Open valve	Activate	V1	
		Wait period	10s	
	Open position	Teach	T2	
	Valve closing	Deactivate	V1	
	Valve closes	Wait on position S1	S1	Timeout 15s
	Autotune mode completed			

Example illustration of the Autotune procedure 1:

1. Check in what position the process valve must be at the beginning of the Autotune procedure (here: closed position). Close it if necessary!
2. Press the teach buttons T2 and T3 at the same time (for 2.5 s) to select the Autotune mode. This mode will be indicated by continuous illumination of all 6 LEDs.
3. Press teach button T1 (for 0.5 s) to start the Autotune 1 mode. This will be indicated by illumination of all 6 LEDs in "chaser mode". The programmed sequence for "Auto-Teach sequence" 1 will now run fully automatically:

MAN 1000138479 EN Version: F Status: RL (released | freigegeben) printed: 10.05.2016

- The position in that the process valve is adjusted will be taught first as position S1. The position of the process valve must therefore be checked first!
- After that, valve V1 is activated. It initiates opening of the process valve.
- After maximum 10 s, the process valve has reached position S2 (open position).
- Then position S2 is taught.
- After that, valve V1 is deactivated. It initiates closing of the process valve.
- Once the process valve is closed (after 15 s maximum), position S1 is displayed by LED.

4. Autotune sequence 1 is complete: Positions S1 and S2 are taught.

In the event that a **timeout** occurs (after 15 seconds wait period), the corresponding Autotune function will be exited and switched to normal operation.
Furthermore, the Teach positions are set to "not taught", i.e. they flash in the fault color.

Autotune 2:

Control	Effect on the process valve	Internal program		Error
T2 + T3	**Autotune mode started**			
T2	Autotune 2 starts			
	Open position	Teach	T2	
	Valve closing	Activate	V1	
		Wait period	10s	
	Closed position	Teach	T1	
	Open valve	Deactivate	V1	
	Valve opens	Wait on position S2	S2	Timeout 15s
	Autotune mode completed			

Autotune 3:

Control	Effect on the process valve	Internal program		Error
T2 + T3	**Autotune mode started**			
T3	Autotune 3 starts			
	Closed position	Teach	T1	
	Open valve	Activate	V1	
		Wait period	10s	
	Open position	Teach	T2	
	Valve closing	Deactivate	V1	
	Valve closes	Wait on position S1	S1	Timeout 15s
	Open clock valve plate	Activate	V2	
		Wait period	10s	
	Clock valve plate	Teach	T3	
	Valve closing	Deactivate	V2	
	Valve closes	Wait on position S1	S1	Timeout 15s
	Autotune mode completed			

MAN 1000138479 EN Version: F Status: RL (released | freigegeben) printed: 10.05.2016

CSI 417.831.1411 csidesigns.com

Autotune 4:

Control	Effect on the process valve	Internal program		Error
T2 + T3	**Autotune mode started**			
T1 + T2	Autotune 4 starts			
	Valve closing	Activate	V2	
		Wait period	10s	
	Closed position	Teach	T1	
	Open valve	Deactivate	V2	
		Activate	V1	
		Wait period	10s	
	Open position	Teach	T2	
	Valve closing	Deactivate	V1	
		Activate	V2	
	Valve closes	Wait on position S1	S1	Timeout 15s
	Neutral position	Deactivate	V2	
	Autotune mode completed			

Autotune 5:

Control	Effect on the process valve	Internal program		Error
T2 + T3	**Autotune mode started**			
T1 + T3	Autotune 5 starts			
	Closed position	Teach	T1	
	Open valve	Activate	V1	
		Wait period	10s	
	Open position	Teach	T2	
	Valve closing	Deactivate	V1	
	Valve closes	Wait on position S1	S1	Timeout 15s
	Intermediate position opens	Activate	V2	
		Wait period	10s	
	Intermediate position	Teach	T3	
	Valve closing	Deactivate	V2	
	Valve closes	Wait on position S1	S1	Timeout 15s
	Autotune mode completed			

Autotune 6:

Spare function

MAN 1000138479 EN Version: F Status: RL (released | freigegeben) printed: 10.05.2016

17. LED COLOR ASSIGNMENTS

The switching states of the feedback positions are signaled centrally to the outside by super-bright LEDs so that quick visual control is possible also for large systems.

The color assignments for all signals to the process valve states correspond to the subsequently listed tables.

To respond in the systems to the different process valve designs and signaling philosophies of the customers, the assignment of functions to the available colors can be configured individually by means of the 4 DIP-switches on site.

(Delivered state DIP 1 - 4: each set to position 0)

When using the control head in an explosive atmosphere, the housing may only be opened in a not energized state.

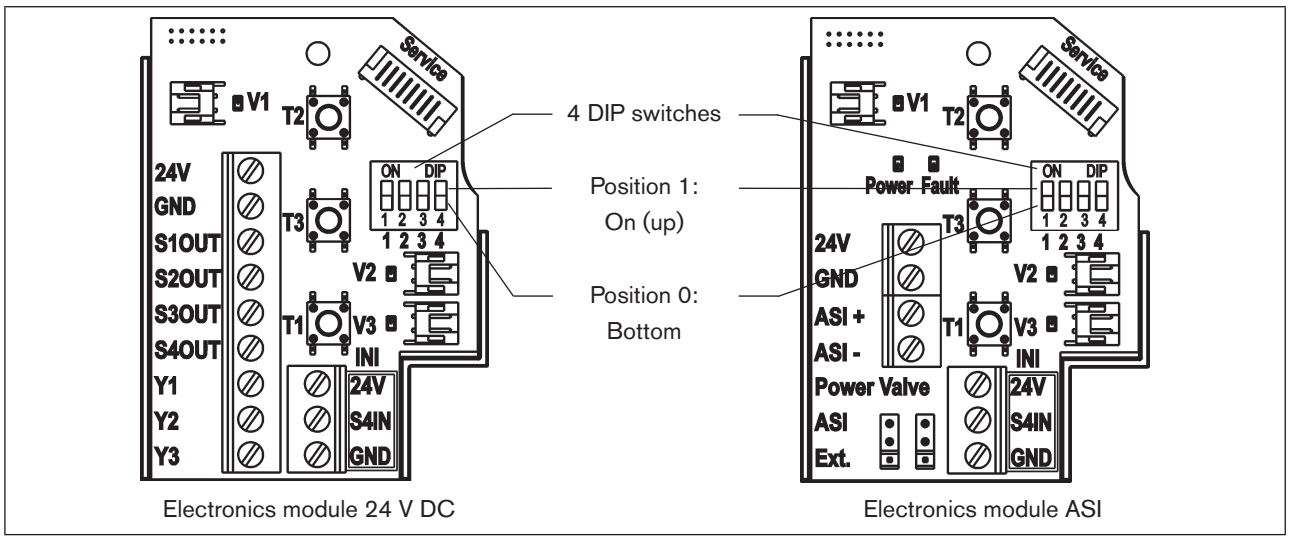

Fig. 35: DIP switches for setting the color coding (in the example of the electronics modules for 24 V DC and AS-i)

MAN 1000138479 EN Version: F Status: RL (released | freigegeben) printed: 10.05.2016

CSI 417.831.1411 csidesigns.com

17.1. Setting the color combinations

Setting of the possible color combinations with the help of the DIP switches:

S1	S2	S3	S4	Fault	DIP1	DIP2	DIP3	DIP4
green	yellow	green		red	0	0	0	0
yellow	green	yellow		red	1	0	0	0
green	red	green		yellow	0	1	0	0
red	green	red		yellow	1	1	0	0
green	yellow	yellow		red	0	0	1	0
yellow	green	green		red	1	0	1	0
green	red	red		yellow	0	1	1	0
red	green	green		yellow	1	1	1	0
green	yellow	green	green	red	0	0	0	1
yellow	green	yellow	yellow	red	1	0	0	1
green	red	green	green	yellow	0	1	0	1
red	green	red	red	yellow	1	1	0	1
green	yellow	yellow	yellow	red	0	0	1	1
yellow	green	green	green	red	1	0	1	1
green	red	red	red	yellow	0	1	1	1
red	green	green	green	yellow	1	1	1	1

(S4IN may be normally open (NC) or normally closed (NO) - factory setting: Normally open contact (can be changed via the PC service program - connect control head via service interface to the PC, note the "PC Service Program" manual, note sub-menu "General start-up".)

17.2. Blinking pattern & fault signaling

The LEDs flash in different "blinking patterns" in the event of a fault or in various states:

Blinking patterns	ON	OFF	Note
	100 ms	100 ms	**Flashes three times** in the corresponding **color for that position:** Teach-In confirmation (after successful teaching: the color for position 1 and 2 is continuously on) **Flashes three times** in the corresponding **fault color:** - if target could not be located in the measuring area during teaching or - if teach position is too close (±0.5 mm) to a previously defined teach position or - if magnetic manual control is used, even though manual control function was disabled by software

MAN 1000138479 EN Version: F Status: RL (released | freigegeben) printed: 10.05.2016

Blinking patterns	ON	OFF	Note
	250 ms	250 ms	**permanent flashing** in the **fault color:** - Teaching does not occur or - Teach Reset implemented or - bus error or - Device Reset implemented **permanent flashing** in the **color for that position:** Signal from position 3
	450 ms	50 ms	Internal Fault (fault color)
	50 ms	450 ms	Service mode/manual control active (fault color)
	125 ms	125 ms	Signal from the external initiator S4 (same as "color for position 3")
	1 s	3 s	Signal in fault color (and additionally color of the corresponding valve position): Service/maintenance notification (maintenance / service required)

17.3. Signal priorities

If a valve has several overlapping states, the following priority list applies:

1. Internal Fault (fault color: 450 ms ON, 50 ms OFF)
2. Manual operating mode is active, e.g. by magnetic manual control - see Chapter "18. Service Mode / Manual Control" (fault color: 50 ms ON, 450 ms OFF)
3. Service / maintenance request (fault color: 1 s ON, 3 s OFF)
4. Other fault, e.g. position measuring system not taught, bus error or other (see Chapter "17.2")

If position feedback signals overlap the following logic applies:

On principle, S4 has the highest priority, descending to S1 (i.e. S4 - S3 - S2 - S1).

S1	S2	S3	S4	Fault	Priority	Note / blinking patterns
active	active	active	**active**		S4	Blinking in S4 blinking pattern (if S4 has been activated by DIP) since S3/S4 has priority over S1 and S2
		active	**active**		S4	Blinking in S4 blinking pattern, if S4 has been activated by DIP
active	active	**active**			S3	Blinking in S3 blinking pattern since S3/S4 position has priority over S1 and S2
active	**active**				S2	Position feedback of S2 has priority

MAN 1000138479 EN Version: F Status: RL (released | freigegeben) printed: 10.05.2016

18. SERVICE MODE / MANUAL CONTROL

By default, the control head provides the following (e.g. for service purposes):

- a magnetic manual control which is easily accessible from the outside for Solenoid Valve 1 (2/A1) *) as well as
- a mechanical manual control accessible when the hood is open on each equi²pped solenoid valve.

18.1. Magnetic manual control

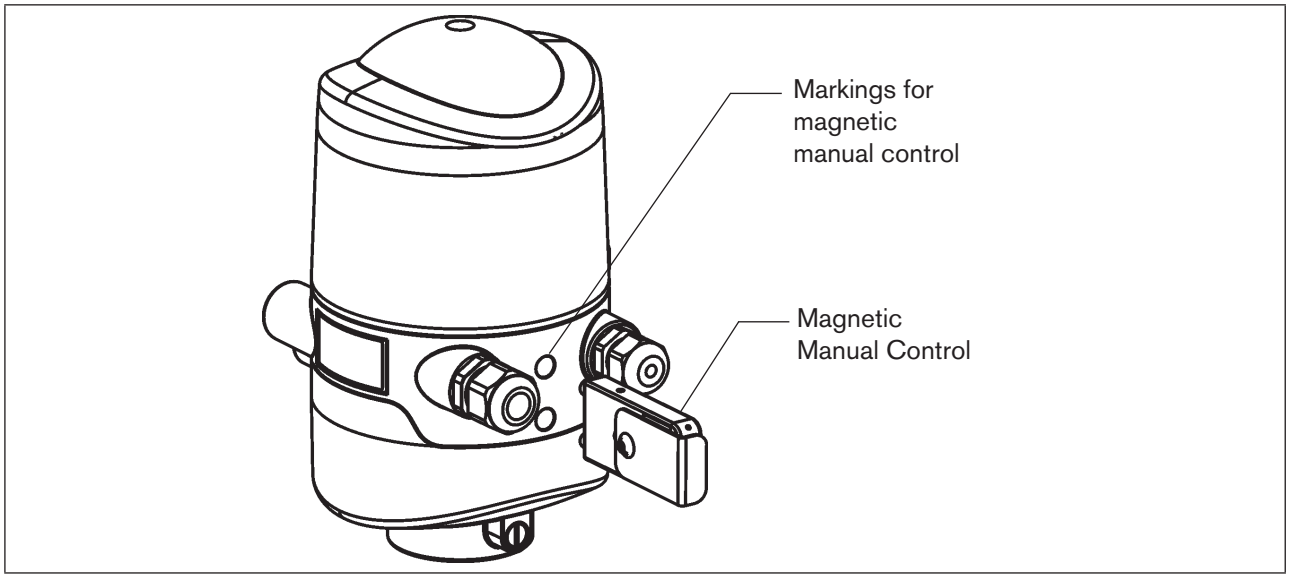

Fig. 36: Manual control on the basis of encoded magnetic fields

Activation/deactivation is possible using the PC service program. Connection to the PC is via the Service interface. Details are described in the "PC service program" manual under the "SYSTEM/Start-up" menu option.

Irrespective of the signal of the higher-level control, the magnetic manual control sets the output of solenoid valve 1 *) electrically to an ON signal and, if control pressure is present, switches the 2/A1 output *).

However, if the output of solenoid valve 1*) is activated by the control (ON signal), this switching state cannot be set to an OFF signal with the manual control!

Caution!

When the magnetic manual control (solenoid valve 1 *)):

- The peripheral fault bit is set on the AS interface design.
- The mode is switched to "Manual control active" for the DeviceNet design and can be read out.
- The feedback signals (positions 1-3, external initiator) function as per normal operation.

Always observe the safety guidelines and the system states!

*) both solenoid valves are actuated simultaneously for the design for double-acting actuators (see Chapter "15. Special designs").

MAN 1000138479 EN Version: F Status: RL (released | freigegeben) printed: 10.05.2016

The activation of the manual control is signaled by an illuminated LED display in the fault color: "Blinking patterns": 50 ms ON, 450 ms OFF.
The "blinking pattern" 100 ms ON, 100 ms OFF (3x) in the fault color signals that the manual control function was disabled by the PC service program - the magnetic manual control does not function in this case! (see Chapter "17.2. Blinking pattern & fault signaling")

Procedure for activating & deactivating the manual control for valve location 2/A1:

→ Observe safety guidelines for the system prior to using the manual control!

→ Activating the magnetic manual control:
Hold the manual control tool on the identification points the between the cable glands for three seconds (see "Fig. 36"):
("blinking pattern" in fault color = 50 ms ON, 450 ms OFF – active manual control;
"blinking pattern" in fault color = 100 ms ON, 100 ms OFF (3x) – manual control function disabled by the software).

→ Once the measure has been completed, deactivate the magnetic manual control:
Hold the manual control tool on the identification points the between the cable glands for another three seconds (see "Fig. 36").

After a power failure the magnetic manual control is reset and the control head restarts in standard operating mode, i.e. the signal of the higher-level control is accepted.

18.2. Mechanical manual control

If additional manual controls are required for additional service purposes or in the event of a failure of the electrical energy, it is possible for all voltage and communication designs to switch the connected process valve using the mechanical manual control of the solenoid valves after opening the housing.

DANGER!

Danger of explosion in explosive atmosphere (only in the event of a fault as zone 2)!

- Opening the hood or the housing in an explosive atmosphere is only allowed in a not energized state!

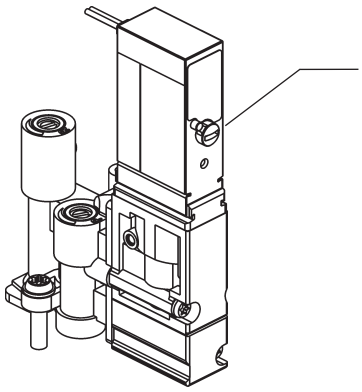

Fig. 37: Mechanical manual control of the solenoid valves

When the service measures have been completed, reset all manual controls to "0" for control-led operation of the system!

CSI 417.831.1411 csidesigns.com

MAN 1000138479 EN Version: F Status: RL (released | freigegeben) printed: 10.05.2016

19. MAINTENANCE, TROUBLESHOOTING

19.1. Safety instructions

DANGER!

Risk of injury from high pressure in the system!

- Before loosening lines and valves, turn off the pressure and vent the lines.

Danger of explosion in explosive atmosphere (only in the event of a fault as zone 2)!

- Opening the hood or the housing in an explosive atmosphere is only allowed in a not energized state!

WARNING!

Risk of injury due to electric shock!

- Before reaching into the system (except for the Teach-In procedure in a non-explosive atmosphere) switch off the power supply and secure it to prevent restarting!
- Observe applicable accident prevention and safety regulations for electrical equipment!

Risk of injury from improper maintenance!

- Maintenance may only be carried out by authorized technicians and with the appropriate tools!

Risk of injury from unintentional activation of the system and uncontrolled restart!

- Secure system against unintentional activation.
- Following maintenance, ensure a controlled restart.

MAN 1000138479 EN Version: F Status: RL (released | freigegeben) printed: 10.05.2016

19.2. Safety positions

Safety positions after failure of the electrical or pneumatic auxiliary power:

Operating mode	Process valve design	Safety positions after failure of the auxiliary power	
		electrical	**pneumatic**
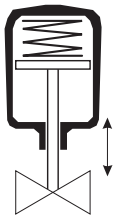 up down	single-acting Control function A ▪ air opening ▪ spring closing	down	down
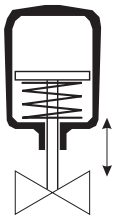 up down	single-acting Control function B ▪ air closing ▪ spring opening	up	up
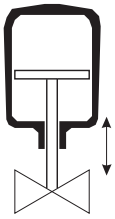 up down	double-acting Control function I ▪ air opening ▪ air closing	**not defined** for both solenoid valves NC*, but **defined** for Solenoid valve1 NC* + Solenoid valve2 NO**	not defined

By default the control head is equipped with solenoid valves which operate in NC mode,
the design for double-acting actuators is equipped with 1 solenoid valve NC and 1 solenoid valve NO**.

If process valves with several switching positions (e.g. double-seated valves) are connected, the safety positions of the individual actuators can be viewed according to the same logic as for a classical single-seated valve.

Safety positions after failure of the bus communication:

AS interface:

If the Watchdog is activated (default), behavior is the same as a failure of the auxiliary electrical power, i.e. all solenoid valve outputs are set to "0".

DeviceNet:

See Chapter “12.12.1. Configuration of the safety position of solenoid valves during a bus error”.[3]

* *NC: 3/2-way valve; closed in rest position, output A unloaded,*
** *NO: 3/2-way valve; opened in rest position, output A pressurized.*

MAN 1000138479 EN Version: F Status: RL (released | freigegeben) printed: 10.05.2016

19.3. Maintenance / service

When used properly, the control head Type 8681 operates maintenance and trouble-free.

For service work, contact the Bürkert Sales Center (Chapter “4.1” on page 12).

If the service/maintenance notification function is active (see Chapter”6.7. Factory settings in the firmware”), a maintenance prompt is issued - indicated by a "blinking pattern" in the fault color (1 s ON, 3 s OFF) - see Chapter “17.2. Blinking pattern & fault signaling”.

19.4. Cleaning

NOTE!

Aggressive cleaning agents may damage the material!

- In the explosion-risk area, only wipe the control head with a damp or anti-static cloth to avoid electro-static charges.
- The customary cleaning agents and foam cleaners can be used to clean the outside. We recommend checking that the cleaning agents are compatible with the housing materials and seals before using the cleaning agent.

→ Clean the control head and rinse it thoroughly with clean water to safeguard against the formation of deposits in grooves and recesses.

If cleaning agent is not rinsed off properly, its concentration may considerably exceed the concentration for use when the water has evaporated. The chemical effect will thus be several times stronger!

Observe the specifications of the manufacturer and the recommendations for use of the cleaning agent manufacturer!

19.5. Malfunctions

In the event of any malfunctions in spite of a correct installation, proceed according to the fault analysis described in the table below:

Fault description	Possible cause of the fault	Troubleshooting
No feedback signal	Position of the position measuring system (Teach-In) not appropriate for the spindle position	Perform / repeat the Teach-In procedure (see Chapter *16.1. Setting the Position Measuring System (Teach-In)*)
	Setting of the external initiators incorrect	Set the external initiator according to the respective operating instructions.
	No or faulty associated feedback signals or external initiator	Set the connections according to the pin and plug configurations described in these operating instructions (for the respective voltage and communication variant).
	Target is not mounted on the process valve's spindle or target faulty	Check the target for correct mounting and condition (see Chapter *6.6. Position measuring system data*).

MAN 1000138479 EN Version: F Status: RL (released | freigegeben) printed: 10.05.2016

Fault description	Possible cause of the fault	Troubleshooting
Feedback signal is "lost" in system operation	Position in the limit range of the feedback field	Repeat the Teach-In procedure (see Chapter "16.1. Setting the position measuring system (Teach-In)")
		Check the process valve end positions during operation against the end positions in non-operative state of the system.
		Check the pressure supply.
Valve output 2/A1 cannot be switched off with the control	Magnetic manual control is still activated	Deactivate the manual control - compare Chapter "18.1. Magnetic manual control"
Valve outputs cannot be switched off by the control	Mechanical manual control at the solenoid valve is still activated	Deactivate the mechanical manual controls on the solenoid valves - compare Chapter "18.2. Mechanical manual control"
Faults are signaled by means of LEDs	Possible causes may vary depending on the version	Please read the corresponding descriptions of the respective communication variant in these operating instructions (see Chapter "17.2. Blinking pattern & fault signaling" on page 82)
No or faulty function of the process valves	No electrical power supply or communication for the control head	Check the power supply and the communication settings (also refer to detailed descriptions of the respective versions in these operating instructions)
	No or insufficient pneumatic supply of the control head	Check the pressure supply and ensure that supply is sufficient
Incorrect function of the process valves	Confused pneumatic connection lines	Check the correct pneumatic connection of the control head to the process valve (for fluid diagrams see chapter "5.3.2. Fluid diagrams" and the operating instructions of the corresponding process valves)
	Valves not correctly connected on electronics module	Check the correct electrical connection of the solenoid valves - comp. "Fig. 14: 24 V DC electronics module"

In the event of any undefined faults, be sure to contact the service department of Bürkert. (see Chapter "4.1. Contact address" on page 12)

MAN 1000138479 EN Version: F Status: RL (released | freigegeben) printed: 10.05.2016

CSI 417.831.1411 csidesigns.com

20. REPLACEMENT OF COMPONENTS AND MODULES

If components or modules need to be replaced for maintenance or service reasons, please observe the following notes and descriptions.

Devices that are used in the explosion-risk area may only be repaired by the manufacturer!

20.1. Safety instructions

DANGER!

Risk of injury from high pressure!

- Before loosening lines and valves, turn off the pressure and vent the lines.

Danger of explosion in explosive atmosphere (only in the event of a fault as zone 2)!

- Opening the hood or the housing in an explosive atmosphere is only allowed in a not energized state!

WARNING!

Risk of injury due to electric shock!

- Before reaching into the system (except for the Teach-In procedure in a non-explosive atmosphere) switch off the power supply and secure it to prevent restarting!
- Observe applicable accident prevention and safety regulations for electrical equipment!

Risk of injury due to improper maintenance work!

- Maintenance work may be carried out by authorized technicians only and with the appropriate tools!

Risk of injury from unintentional activation of the system and uncontrolled restart!

- Secure system against unintentional activation.
- Following maintenance, ensure a controlled restart.

NOTE!

IP65 / IP67 protection

- During all work steps, make sure that IP65 / IP67 protection is once again ensured for the control head when used as intended!

Opening and closing the control head

- During all work which requires opening and closing of the control head, also observe the notes and comments in Chapter “8. Opening and Closing the Housing”!

MAN 1000138479 EN Version: F Status: RL (released | freigegeben) printed: 10.05.2016

20.2. Changing the electronics module

NOTE!

Electrostatic sensitive components/modules!

- The device contains electronic components which react sensitively to electrostatic discharge (ESD). Contact with electrostatically charged persons or objects may be hazardous to these components. In the worst case scenario, they will be destroyed immediately or will fail after start-up.
- Observe the requirements in accordance with DIN EN 61340-5-1 to minimize or avoid the possibility of damage caused by sudden electrostatic discharge!
- Also ensure that you do not touch electronic components when the supply voltage is on!

Removal procedure:

→ Open the housing following the instructions in Chapter "8. Opening and Closing the Housing".

→ If necessary, mark the electrical connections to ensure correct assignment during reinstallation!

→ If necessary, note the position of the 4 DIP switches for the set color code and on the DeviceNet electronics module the DIP switches (8-switch block) for Baud rate and address. On the AS-i electronics module, note the AS interface address and the jumper positions (power supply to AS interface).

→ If required, read out and note special settings by the PC service program.

→ Loosen all electrical connections on the electronics module (plug-type connections, screw-type terminal connections).

→ Loosen the screw-type connection (Torx T10 screw) of the electronics module and store the screw in a safe place.

→ Carefully press the electronics module forwards so that the contact pins on the position measuring system are exposed.

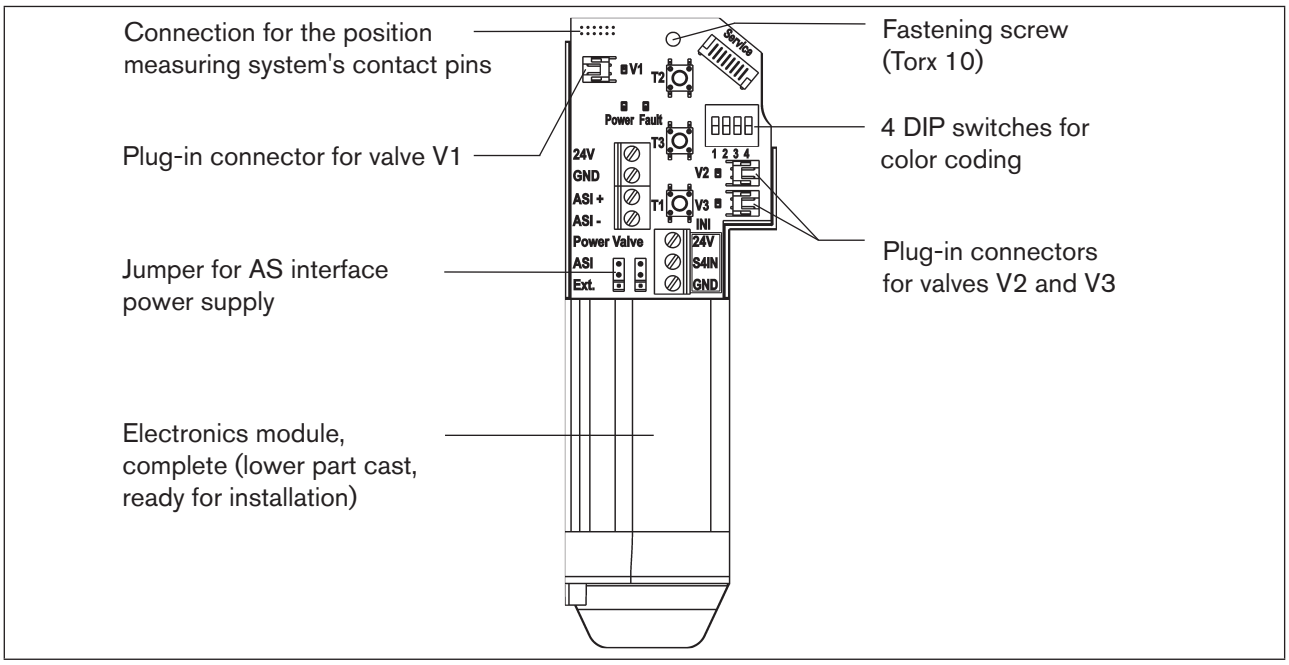

Fig. 38: Electronics module (here example of AS interface)

MAN 1000138479 EN Version: F Status: RL (released | freigegeben) printed: 10.05.2016

→ Carefully lift the electronics module upwards.

Installation procedure:

→ Carefully insert the entire electronics module into the recess in the lower housing part.

→ Plug the electronics module carefully onto the contact pins for the position measuring system.

→ Refasten the electronics module with the Torx T10 screw (torque 0.4 Nm).

→ Reattach the electrical connections.

→ Check DIP switch positions (4-switch block for color coding, 8-switch block on DeviceNet electronics module for address and Baud rate) and set the previously noted switch settings, if necessary.

→ If necessary, set AS interface address and jumper positions.

→ If required, make settings again, read out by the PC service program, using the PC service program.

→ Perform Teach-In procedure (see Chapter "16.1. Setting the position measuring system (Teach-In)").

Be sure to work carefully and cautiously, so that the electronics are not damaged.

→ Close the housing following the instructions in Chapter "8. Opening and Closing the Housing".

20.3. Changing the valves

According to the design, 0 to 3 valve modules have been installed in the control head. The valves have been designed with the flow restriction equipment for intake and exhaust air and must be installed as a valve module.

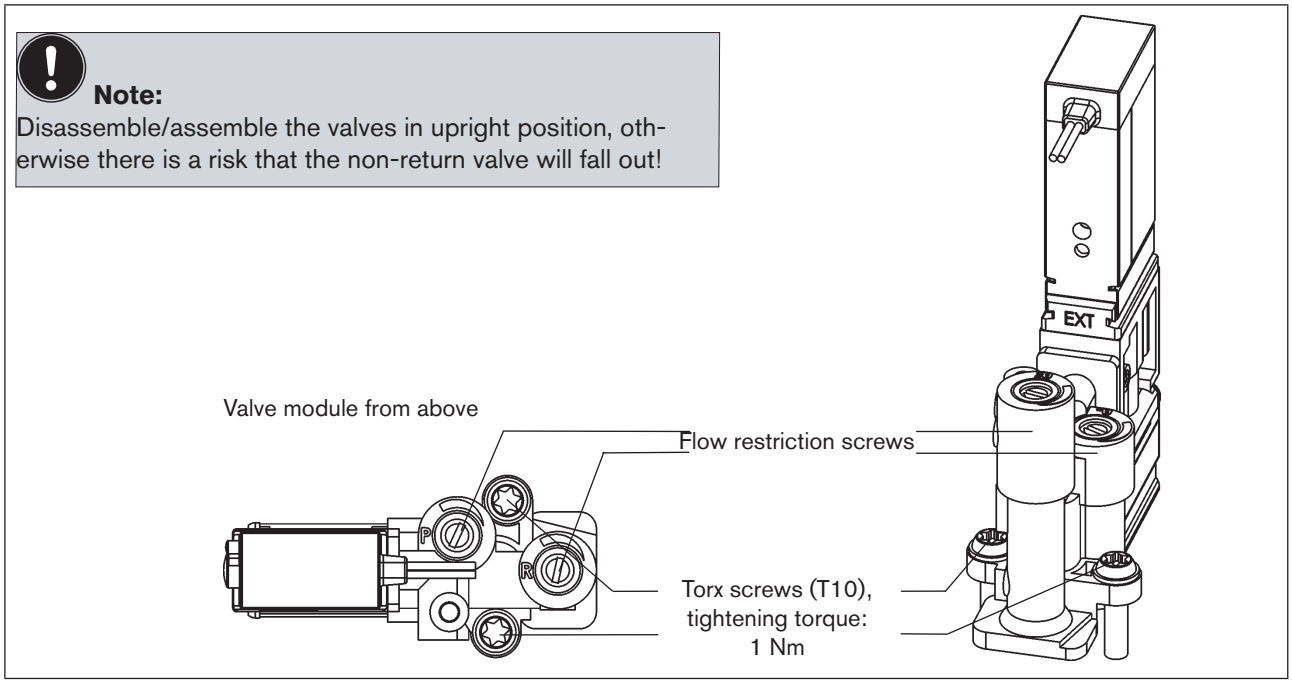

Fig. 39: Valve module

Procedure:

MAN 1000138479 EN Version: F Status: RL (released | freigegeben) printed: 10.05.2016

→ Open the housing following the instructions in Chapter "8. Opening and Closing the Housing".

→ If necessary, mark the electrical connections to ensure correct assignment during reinstallation.

→ Loosen the electrical connections.

→ Loosen the connecting screws (Torx T10) for the corresponding valve module.

→ Take out the valve module and replace it with the spare part set.

→ When inserting the valve module, make sure that the form seal fits correctly and fully on the lower side of the respective valve flange!

→ Valve module: to do this, insert the screws (Torx T10) into the existing threading by turning them backwards and tighten them to a torque of 1.2 Nm.

→ Reattach the electrical connections.
(If other connections, apart from the solenoid valve connections, have been removed, read the corresponding chapters on the electrical installation of the respective voltage / bus / connection version)

→ Close the housing following the instructions in Chapter "8. Opening and Closing the Housing".

20.4. Changing the position measuring system

The position measuring system consists of a housing, with a PCB mounted above with LEDs and light conductor. There are 4 snap-fit hooks, which secure the position measuring system in the lower housing part, by snapping them into place.

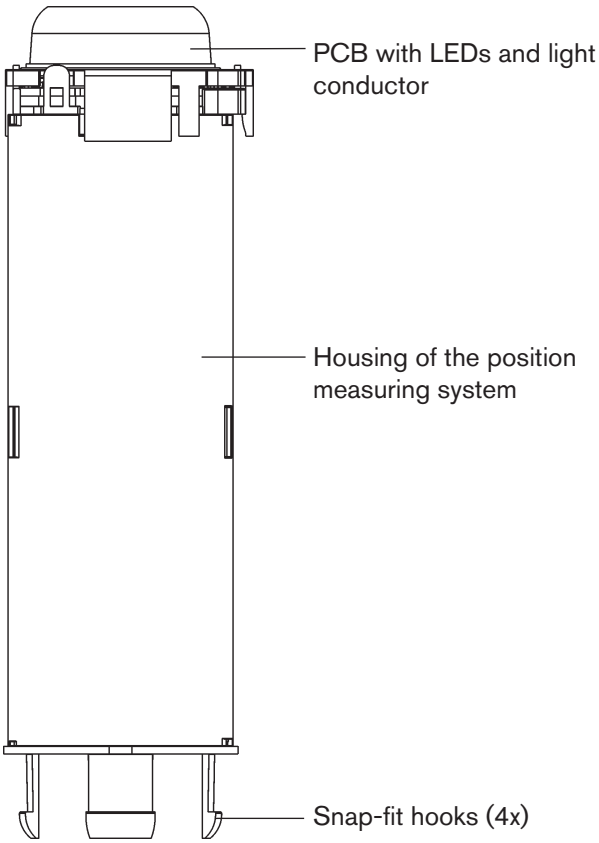

Fig. 40: Position measuring system

MAN 1000138479 EN Version: F Status: RL (released | freigegeben) printed: 10.05.2016

DANGER!

Risk of injury from high pressure!

- Before loosening lines and valves, turn off the pressure and vent the lines.

NOTE!

Electrostatic sensitive components/modules!

- Before changing the position measuring system, switch the electrical power for the control head off so that destruction of the PCB and electronics module is avoided.
- The device contains electronic components which react sensitively to electrostatic discharge (ESD). Contact with electrostatically charged persons or objects may be hazardous to these components. In the worst case scenario, they will be destroyed immediately or will fail after start-up.
- Observe the requirements in accordance with DIN EN 61340-5-1 to minimize or avoid the possibility of damage caused by sudden electrostatic discharge!
- Also ensure that you do not touch electronic components when the supply voltage is on!

Deinstallation procedure:

→ Switch the electrical power to the control head off!

→ Loosen the control head from the process valve.

→ Open the housing following the instructions in Chapter "8. Opening and Closing the Housing".

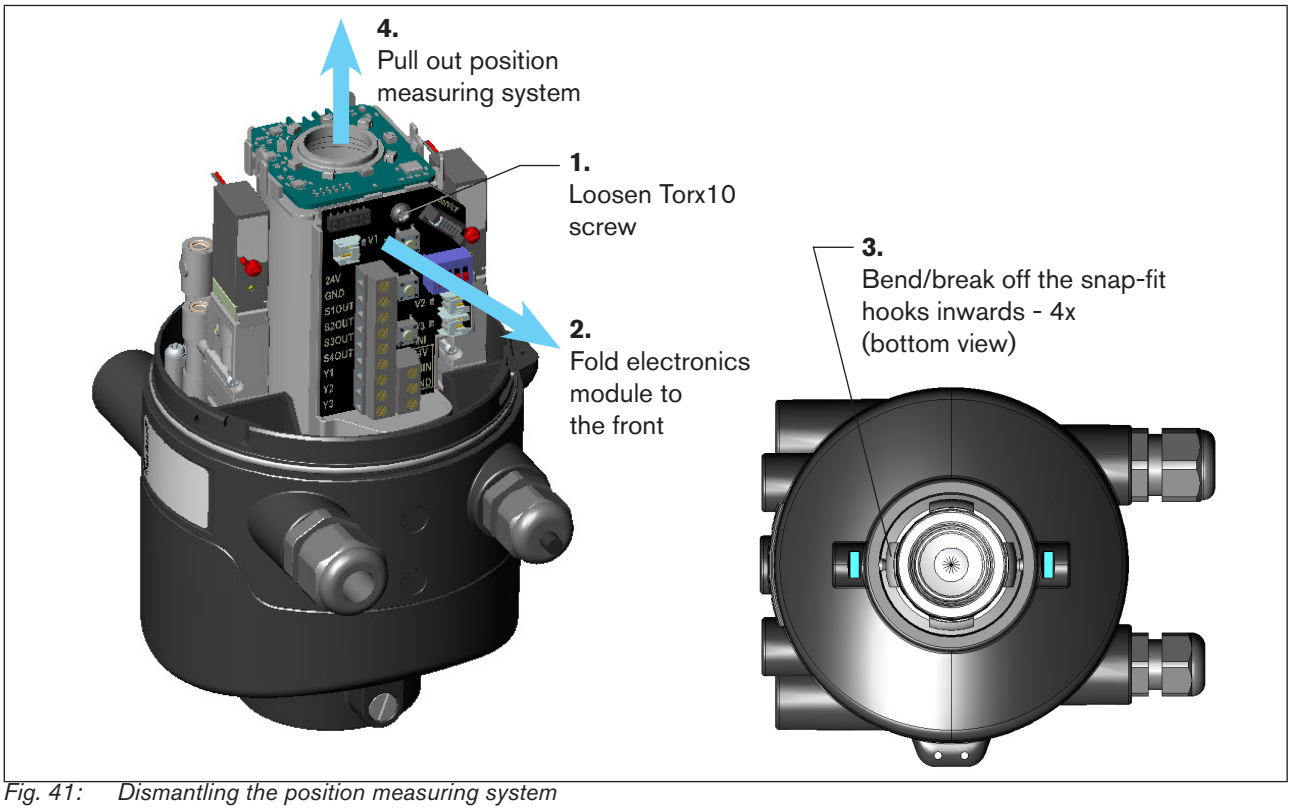

Fig. 41: Dismantling the position measuring system

MAN 1000138479 EN Version: F Status: RL (released | freigegeben) printed: 10.05.2016

→ Loosen the fastening screw (Torx 10) of the electronics module (see Chapter "20.2. Changing the electronics module").

→ Tilt the electronics forwards to loosen the position measuring system's contact pins from the electronics module.

→ Bend the snap-fit hooks on the bottom end of the position measuring system inwards. In some cases, break them off.

→ Pull the position measuring system upwards out of the guide.

Installation procedure:

→ Insert the new position measuring system from above so that the contact pins are located on the side of the electronics module.

→ Carefully push the housing of the position measuring system downwards until the snap-fit hooks snap into place.

→ Slide the electronics module carefully onto the contacts pins and fasten the electronics module using the Torx screw.

→ Remount the control head on the process valve as described in Chapter "7. Assembly".

→ Adjust position measuring system to the process valve by teaching (see Chapter "16.1. Setting the position measuring system (Teach-In)")

→ Close the housing following the instructions in Chapter "8. Opening and Closing the Housing".

MAN 1000138479 EN Version: F Status: RL (released | freigegeben) printed: 10.05.2016

CSI 417.831.1411 csidesigns.com

21. SHUTDOWN

21.1. Safety instructions

DANGER!

Risk of injury from high pressure!

- Before loosening lines and valves, turn off the pressure and vent the lines.

Danger of explosion in explosive atmosphere (only in the event of a fault as zone 2)!

- Opening the hood or the housing in an explosive atmosphere is only allowed in a not energized state!

WARNING!

Risk of injury due to electric shock!

- Before reaching into the system (except for the Teach-In procedure) switch off the power supply and secure it to prevent reactivation!
- Observe applicable accident prevention and safety regulations for electrical equipment!

Risk of injury due to improper disassembly!

- Disassembly work may be carried out by authorized technicians only and with the appropriate tools!

21.2. Dismantling the control head Type 8681

Prior to starting with the work, check the system status!

Procedure:

Cable gland versions:

→ Open the housing following the instructions in Chapter "8. Opening and Closing the Housing".

→ Uninstall the electrical connections at the terminal strip.

→ Close the housing following the instructions in Chapter "8. Opening and Closing the Housing".

→ Loosen the pneumatic connections (for a detailed description, see Chapter "9. Pneumatic Installation").

→ Loosen the locking screws (shoulder screws M5).

→ Pull control head upwards and off the adaptation.

Multi-pole connection versions:

→ Remove the multi-pole plugs.

→ Loosen the pneumatic connections (for a detailed description, see Chapter "9. Pneumatic Installation").

→ Loosen the locking screws (shoulder screws M5).

→ Pull control head upwards and off the adaptation.

MAN 1000138479 EN Version: F Status: RL (released | freigegeben) printed: 10.05.2016

22. PACKAGING AND TRANSPORT

NOTE!

Transport damage!

Inadequately protected devices may be damaged during transportation.

- During transportation protect the device against moisture and dirt in shock-resistant packaging.
- Avoid the effects of heat and cold which could result in temperatures above or below the permitted storage temperature.

Approved non-return and reusable transport containers are used for the transport ex factory and storage of the control head. Preferably use this packaging.

If the control head is stored for further pre-assembly of a system, for example as part of a process valve module, kindly make sure:

→ that the control head has been secured sufficiently!

→ that the electrical and pneumatic lines cannot be accidentally damaged and / or cannot indirectly damage the control head!

→ that the control head is not used as support during packaging and transport!

→ that the control head is not exposed to any mechanical stress!

23. STORAGE

NOTE!

Incorrect storage may damage the device.

- Store the device in a dry and dust-free location!
- Storage temperature: -20 ... +65 °C.

Kindly make sure that the devices, following storage at low temperatures, are heated slowly to room temperature before you carry out any assembly work on the devices or start operation of the devices!

24. DISPOSAL

→ Dispose of the device and packaging in an environmentally friendly manner.

NOTE!

Damage to the environment caused by device components contaminated with media.

- Observe the relevant disposal and environmental protection regulations.

Note:

Observe the national waste disposal regulations.

MAN 1000138479 EN Version: F Status: RL (released | freigegeben) printed: 10.05.2016

bürkert
FLUID CONTROL SYSTEMS

MAN 1000138479 EN Version: F Status: RL (released | freigegeben) printed: 10.05.2016

CSI 417.831.1411 csidesigns.com

www.burkert.com