The Optimum Choice for Ultra-Clean Processes

SX Rotary Lobe Pump

SX Rotary Lobe Pump

Application

The SX range of rotary lobe pumps has been designed for use on wide ranging applications within the Pharmaceutical, Biotechnology, Fine Chemical and Speciality Food industries. Being certified by EHEDG (European Hygienic Equipment Design Group) as fully CIP cleanable to their protocol, the SX range is ideally suited to applications where cleanability and corrosion resistance is paramount.
In addition the SX pump range also conforms to USA 3-A Sanitary Standard and all media contacting components are FDA compliant. The SX pump operates with a high efficiency, low shear pumping action for assured gentle handling of delicate and sensitive media.

The SX pump range is also classified for use in potentially explosive atmospheres under the ATEX Directive 94/9/EC Group II, Categories 2 & 3, with temperature classification T1 to T4.

The SX range is compact in size, capable of flow rates up to 506 gpm and pressures up to 218 psi.

Standard Design

Pump Gearbox

The SX pump with its conventional lobe pump design concept has a robust cast iron gearbox, which provides maximum shaft rigidity and easy oil seal replacement. The SX range in series 1 - 4 has a universal gearbox design. This gives the flexibility of mounting pumps with the inlet and outlet ports in either a vertical or horizontal plane, by changing the foot and its position.

The SX range in series 5 & 6 has dedicated gearbox castings, which also allows the inlet and outlet ports to be in either the vertical or horizontal plane. The SX series 7 has a dedicated gearbox casting allowing inlet and outlet ports in a vertical plane only.

Pumphead Construction

The SX pump has sanitary design full bore inlet and outlet ports to International Standards, maximizing inlet and outlet port efficiency and NPSH characteristics. Vertical porting and unique rotorcase internal profile enhances self-draining and self-venting while maintaining optimum volumetric efficiency.
The SX pump has four lobe rotors, designed using CFD (Computational Fluid Dynamics) to develop the optimum rotor geometry - possibly the first rotary lobe pump to be developed using this technology. All rotors are rated to 302°F facilitating use with CIP/SIP processes.

Maximum Solid Size Capability

Pump Series	Max. Size of Spherical Solids (in.)
SX1	0.28
SX2	0.39
SX3	0.51
SX4	0.63
SX5	0.75
SX6	0.98
SX7	1.10

Materials of Construction

Pump gearbox - high quality grey cast iron.
Pumphead - product wetted components in 316L.
Product wetted elastomers of EPDM, MVQ, FPM all FDA conforming.
All media contacting elastomers are controlled compression joints, the latest technology where static and dynamic elastomer seals are used to prevent pumped media leaking to atmosphere.

All product wetted rubberparts are in compliance with FDA section 21 CFR 177.2600 & section 21 CFR 177.1550 (PTFE). EPDM Elastomers are furthermore in compliance with USP Class VI section 88 biological reactivity test, in Vivo.

Tri-Clover®

Authorized to carry the 3A symbol

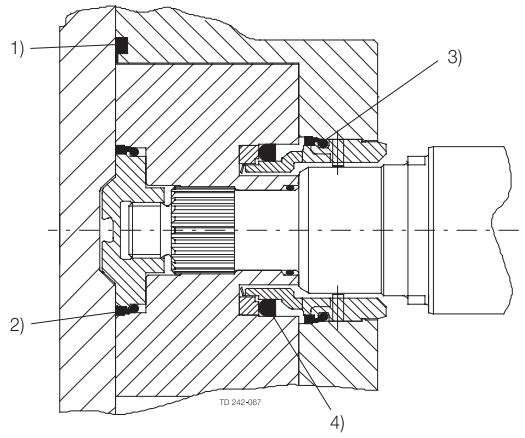

1. Front cover compression joint
2. Spline sealing cup seal
3. Cup seal
4. Squad ring

Weight

Model	Bare Shaft Pump (lbs.)	
	Horizontal porting	Vertical porting
SX1NLD	33	35
SX1WLD	35	37
SX2NLD	71	73
SX2WLD	73	75
SX3NLD	126	130
SX3WLD	130	134
SX4NLD	236	243
SX4WLD	249	256
SX5NLD	342	342
SX5WLD	364	364
SX6NLD	613	613
SX6WLD	639	639
SX7NLD	-	750
SX7WLD	-	798

Shaft Seal Options

- Single or single flush/quench (steam barrier for aseptic application) R00 type mechanical seals.
- Double R00 type mechanical seal for flush.

All sealing options are fully front loading and fully interchangeable without the need for additional housings or pump component changes. Specialized seal setting of the mechanical seal is not required as the seal is dimensionally set on assembly. This feature further enhances fast and efficient on-site seal interchangeability.

Materials for Mechanical Seals

Carbon/Stainless Steel, Silicon Carbide/Silicon Carbide or variations of these materials to suit fluid being pumped and/or application requirements. The seal seat and face material combinations are all EHEDG compliant.

Pump Sizing

In order to correctly size a rotary lobe pump some essential information is required. Provision of this information listed below enables our Customer Support personnel to obtain the optimum pump selection.

Product/Fluid Data

- Fluid to be pumped
- Viscosity
- SG/Density
- Pumping temperature, minimum, normal and maximum
- Cleaning in Place temperature(s), minimum, normal and maximum

Performance Data

- Flow rate, minimum, normal and maximum
- Discharge head/pressure (closest to pump outlet)
- Suction condition

Standard Specification Options

- Tri-clamp inlet and outlet ports standard
- Screwed male inlet and outlet ports to DIN11851, SMS, ISS/IDF or RJT or Tri-clamp.
- Heating/Cooling Jacket for Rotorcase Cover.
- Electropolished product wetted components.
- Complete pump unit comprising: Pump + Stainless Steel Baseplate + coupling with guard + Geared electric motor suitable for (or supplied with) frequency speed control or manual variable speed drive (advise motor enclosure and electrical supply).
- Full material traceability on request to EN 10204 3.1.

Working Principle

The positive displacement of the SX pump is provided by non-contacting, rotating four lobe rotors within a fully swept pump chamber. All SX pumps are capable of bi-rotational flow without modification.

Fig 1.

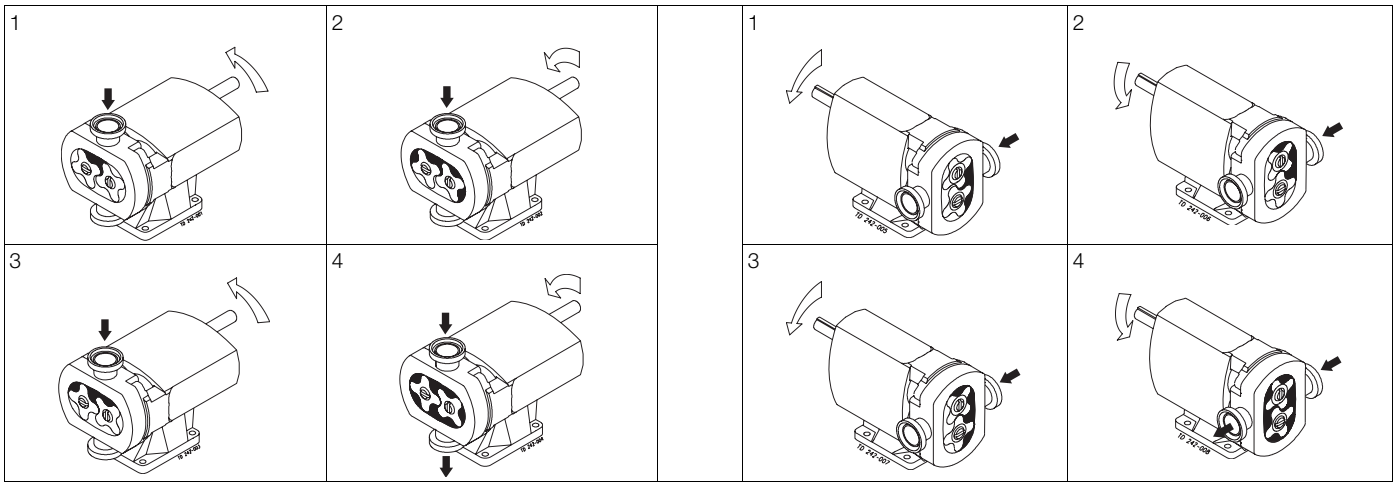

Flows/Pressures/Connections

SX Series	SX Model	Displacement			Inlet and Outlet Connection Size		Differential Pressure (see note 1)		Maximum Speed
		Litre/rev	Imp gall/100 rev	US gall/100 rev	mm	in	bar	psi	rev/min
1	SX1NLD	0.05	1.11	1.32	25	1	12	175	1200
	SX1WLD	0.07	1.54	1.85	40	1.5	7	100	1200
2	SX2NLD	0.128	2.82	3.38	40	1.5	15	215	1000
	SX2WLD	0.181	3.98	4.78	50	2	7	100	1000
3	SX3NLD	0.266	5.85	7.03	50	2	15	215	1000
	SX3WLD	0.35	7.70	9.25	65	2.5	7	100	1000
4	SX4NLD	0.46	10.12	12.15	50	2	15	215	1000
	SX4WLD	0.63	13.86	16.65	65	2.5	10	145	1000
5	SX5NLD	0.82	18.04	21.67	65	2.5	15	215	600
	SX5WLD	1.15	25.30	30.38	80	3	10	145	600
6	SX6NLD	1.40	30.80	36.99	80	3	15	215	500
	SX6WLD	1.90	41.80	50.20	100	4	10	145	500
7	SX7NLD	2.50	55.00	66.05	100	4	15	215	500
	SX7WLD	3.80	83.60	100.40	150	6	10	145	500

Note 1.
These pressure ratings may vary for pumps with certain threaded connections.

Bareshaft Pump Dimensions

Vertically ported

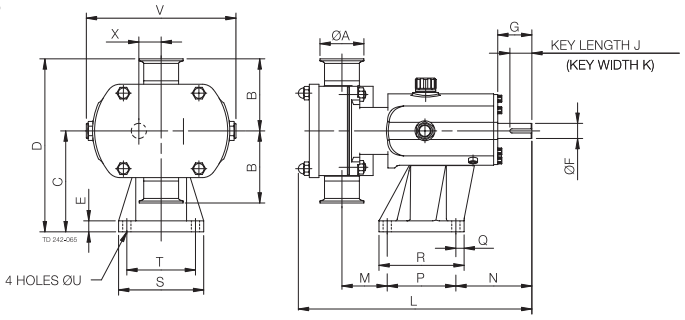

All dimensions in inches, except where noted

PUMP	A	B	C	D	E	F (mm)	G	J	K (mm)	L	M	N	P	Q	R	S	T	U	V	X
SX1NLD	1.00	3.74	4.45	8.19	0.63	16	1.57	1.18	5	10.87	2.13	3.94	3.15	0.87	4.49	4.09	3.15	0.39	7.05	0.93
SX1WLD	1.50	3.74	4.45	8.19	0.63	16	1.57	1.18	5	11.38	2.36	3.94	3.15	0.87	4.49	4.09	3.15	0.39	7.05	0.93
SX2NLD	1.50	4.13	5.79	9.92	0.63	22	1.97	1.26	6	12.76	2.32	4.37	3.94	0.47	4.88	4.88	3.94	0.47	8.62	1.28
SX2WLD	2.00	4.13	5.79	9.92	0.63	22	1.97	1.26	6	13.39	2.60	4.37	3.94	0.47	4.88	4.88	3.94	0.47	8.62	1.28
SX3NLD	2.00	4.92	6.89	11.81	0.87	28	2.36	1.57	8	16.97	2.83	5.59	6.10	0.59	7.28	6.10	4.92	0.55	9.96	1.48
SX3WLD	2.50	4.92	6.89	11.81	0.87	28	2.36	1.57	8	17.60	3.03	5.59	6.10	0.59	7.28	6.10	4.92	0.55	9.96	1.48
SX4NLD	2.00	5.91	8.39	14.29	0.98	38	3.15	2.48	10	20.24	2.95	6.85	7.87	0.67	9.21	7.24	5.91	0.55	12.09	1.95
SX4WLD	2.50	5.91	8.39	14.29	0.98	38	3.15	2.48	10	20.98	3.19	6.85	7.87	0.67	9.21	7.24	5.91	0.55	12.09	1.95
SX5NLD	2.50	6.89	10.12	17.01	1.18	45	4.33	2.76	14	23.58	2.40	10.39	7.87	0.79	9.45	8.66	7.09	0.55	13.58	2.36
SX5WLD	3.00	6.86	10.12	17.01	1.18	45	4.33	2.76	14	24.65	3.19	10.39	7.87	0.79	9.45	8.66	7.09	0.55	13.58	2.36
SX6NLD	3.00	7.48	11.61	19.09	1.18	48	4.33	2.76	14	27.05	3.03	10.51	10.24	0.79	11.81	9.84	8.27	0.55	15.75	2.76
SX6WLD	4.00	7.48	11.61	19.09	1.18	48	4.33	2.76	14	28.15	3.50	10.51	10.24	0.79	11.81	9.84	8.27	0.55	15.75	2.76
SX7NLD	4.00	8.07	14.37	22.44	1.18	60	4.33	3.54	18	30.04	3.70	11.34	11.02	0.98	12.99	11.42	9.45	0.71	18.70	3.21
SX7WLD	6.00	8.07	14.37	22.44	1.18	60	4.33	3.54	18	32.17	4.76	11.34	11.02	0.98	12.99	11.42	9.45	0.71	18.70	3.21

Horizontally ported

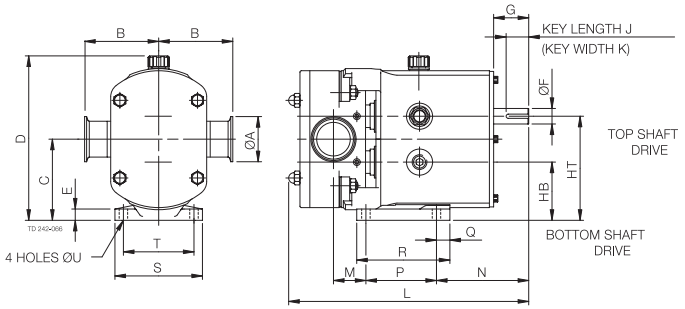

All dimensions in inches, except where noted

PUMP	A	B	C	D	E	F (mm)	G	HB	HT	J	K (mm)	L	M	N	P	Q	R	S	T	U
SX1NLD	1.00	3.74	3.54	7.40	0.39	16	1.57	2.62	4.47	1.18	5	10.87	1.46	4.61	3.15	0.98	4.53	3.94	3.15	0.39
SX1WLD	1.50	3.74	3.54	7.40	0.39	16	1.57	2.62	4.47	1.18	5	11.38	1.69	4.61	3.15	0.98	4.53	3.94	3.15	0.39
SX2NLD	1.50	4.13	4.53	9.17	0.63	22	1.97	3.25	5.81	1.26	6	12.76	1.54	5.16	3.94	0.75	5.20	4.88	3.94	0.47
SX2WLD	2.00	4.13	4.53	9.17	0.63	22	1.97	3.25	5.81	1.26	6	13.39	1.81	5.16	3.94	0.75	5.20	4.88	3.94	0.47
SX3NLD	2.00	4.92	5.43	10.75	0.71	28	2.36	3.96	6.91	1.57	8	16.97	2.72	6.89	4.92	1.18	7.13	6.06	4.92	0.55
SX3WLD	2.50	4.92	5.43	10.75	0.71	28	2.36	3.96	6.91	1.57	8	17.60	2.91	6.89	4.92	1.18	7.13	6.06	4.92	0.55
SX4NLD	2.00	5.91	6.42	12.80	0.79	38	3.15	4.47	8.37	2.48	10	20.24	2.95	8.86	5.91	1.38	7.95	7.24	5.91	0.55
SX4WLD	2.50	5.91	6.42	12.80	0.79	38	3.15	4.47	8.37	2.48	10	20.98	3.19	8.86	5.91	1.38	7.95	7.24	5.91	0.55
SX5NLD	2.50	6.89	7.68	14.80	0.79	45	4.33	5.31	10.04	2.76	14	23.58	1.81	10.98	7.09	1.38	10.83	8.27	7.09	0.55
SX5WLD	3.00	6.89	7.68	14.80	0.79	45	4.33	5.31	10.04	2.76	14	24.65	2.60	10.98	7.09	1.38	10.83	8.27	7.09	0.55
SX6NLD	3.00	7.48	8.86	16.89	0.79	48	4.33	6.10	11.61	2.76	14	27.05	3.07	10.47	10.2	1.57	14.57	8.66	7.48	0.55
SX6WLD	4.00	7.48	8.86	16.89	0.79	48	4.33	6.10	11.61	2.76	14	28.15	3.54	10.47	10.2	1.57	14.57	8.66	7.48	0.55